G.T. COMIS S.p.A.
RACCORDERIE EMILIANE

SCHEDA TECNICA
TECHNICAL DATA SHEET

PRODOTTO | *PRODUCT*
FILTRO A Y

AISI 316 Y STRAINER

CODICE ARTICOLO | *CODE*
1030

FAMIGLIA | *FAMILY*
FILTRI IN ACCIAIO INOX
STAINLESS STEEL FILTERS

MATERIALE | *MATERIAL*
STAINLESS STEEL AISI 316 (1.4401),

FILETTATURA | *THREAD*
ISO 228

01 DISEGNO TECNICO | *TECHNICAL DRAWING*

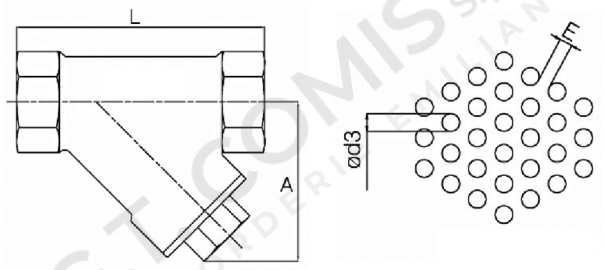

02 IMMAGINE PRODOTTO | *PRODUCT PICTURE*



03 DATI TECNICI | *TECHNICAL DATA*

CODICE	Ø	DN	A mm	L mm	Ød3 mm	E mm	CONF.
2322506	1/4”	8	30	65	1,0	1,0	60
2322507	3/8”	10	30	65	1,0	1,0	60
2322508	1/2”	15	40	65	1,0	1,0	40
2322509	3/4”	20	45	80	1,0	1,0	40
2322510	1”	25	55	90	1,0	1,0	20
2322511	1”1/4	32	65	105	1,0	1,0	12
2322512	1”1/2	40	70	120	1,0	1,0	5
2322513	2”	50	85	140	1,0	1,0	4

04 NOTE TECNICHE | *NOTES*

CERTIFICATO / CERTIFICATE: EN 10204 3.1
WORKING TEMPERATURE: -25°C/+200°C
NOMINAL MAXIMUM PRESSURE: 40 BAR

PRODOTTO | *PRODUCT*
FILTRO A Y

AISI 316 Y STRAINER

CODICE ARTICOLO | *CODE*
1030

FAMIGLIA | *FAMILY*
RUBINETTI E FILTRI IN ACCIAIO INOX
STAINLESS STEEL TAPS AND FILTERS

MATERIALE | *MATERIAL*
STAINLESS STEEL AISI 316 (1.4401),

FILETTATURA | *THREAD*
ISO 228

01 DISEGNO TECNICO | *TECHNICAL DRAWING*

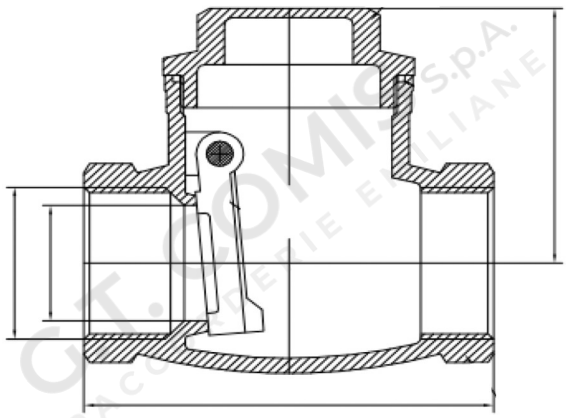

02 IMMAGINE PRODOTTO | *PRODUCT PICTURE*



03 DATI TECNICI | *TECHNICAL DATA*

CODICE	Ø	DN	A mm	L mm	Ød3 mm	E mm	CONF.
2322506	1/4”	8	30	65	1,0	1,0	60
2322507	3/8”	10	30	65	1,0	1,0	60
2322508	1/2”	15	40	65	1,0	1,0	40
2322509	3/4”	20	45	80	1,0	1,0	40
2322510	1”	25	55	90	1,0	1,0	20
2322511	1”1/4	32	65	105	1,0	1,0	12
2322512	1”1/2	40	70	120	1,0	1,0	5
2322513	2”	50	85	140	1,0	1,0	4

Nominal maximum pressure: 40 bar