G.T. COMIS S.p.A.
RACCORDERIE EMILIANE

**SCHEDA TECNICA**
*TECHNICAL DATA SHEET*

**PRODOTTO** | *PRODUCT*
# GIUNTO RAPIDO DOPPIO

DOUBLE JOINT

**CODICE ARTICOLO** | *CODE*
**1266**

**FAMIGLIA** | *FAMILY*

**COMPATIBILI**
*PER TUBI FERRO EN 10255 E POLIETILENE EN 12201-2*

**MATERIALE** | *MATERIAL*

**GALVANIZED CAST IRON, NBR GASKET**

**FILETTATURA** | *THREAD*

**UNI EN 10226-1 (EX ISO 7/1)**

## 01 DISEGNO TECNICO | *TECHNICAL DRAWING*

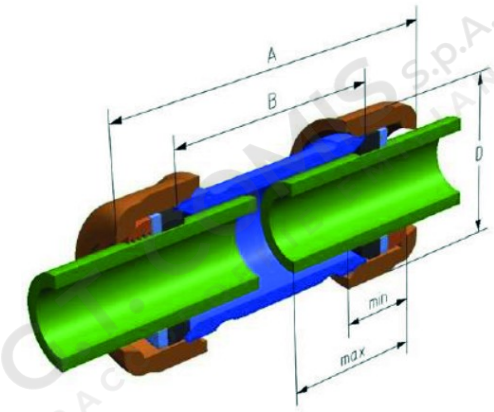


## 02 IMMAGINE PRODOTTO | *PRODUCT PICTURE*



## 03 DATI TECNICI | *TECHNICAL DATA*

| CODICE | Ø | A mm | B mm | D mm | min mm | max mm | tubo ferro | tubo PE | CONF. | PACK |
|---|---|---|---|---|---|---|---|---|---|---|
| **1191327** | 3/8” | 85 | 54 | 39 | 22 | 35 | 15,8-17,7 | 15,8-17,7 | 5 | 60 |
| **1191328** | 1/2” | 85 | 54 | 40,5 | 22 | 35 | 19,3-22,0 | 19,3-22,0 | 5 | 50 |
| **1191329** | 3/4” | 90 | 60 | 47,5 | 22 | 35 | 24,3-27,5 | 24,3-27,5 | 5 | 50 |
| **1191330** | 1” | 95 | 64 | 55 | 24 | 40 | 31,2-34,4 | 31,2-34,4 | 5 | 20 |
| **1191331** | 1”1/4 | 105 | 69 | 67 | 24 | 45 | 39,3-43,1 | 39,3-43,1 | 2 | 12 |
| **1191332** | 1”1/2 | 108 | 74 | 73 | 24 | 45 | 47,7-51,5 | 47,7-51,5 | 2 | 10 |
| **1191333** | 2” | 141 | 79 | 91 | 30 | 57 | 59,5-63,8 | 59,5-63,8 | 1 | 10 |
| **1191334** | 2”1/2 | 180 | 136 | 150 | 45 | 85 | 75,7–88,0 – 113,1 – 115 | 75,0–88,0 – 113,1 – 115 | 1 | 1 |
| **1191335** | 3” flang. | 220 | 150 | 160 | 50 | 85 | | | 1 | 1 |
| **1191336** | 4” flang. | 200 | 160 | 190 | 50 | 85 | | | 1 | 1 |

## 04 NOTE TECNICHE | *NOTES*

MAXIMUM WORKING TEMPERATURE: 80°C
WORKING PRESSURE: MAX PN16