RACCORDI IN OTTONE GIALLO | yellow brass fittings

INTRODUZIONE

G.T.COMIS è in grado di offrire alla propria Clientela una gamma completa di raccordi filettati in ottone.
Le dimensioni disponibili coprono un intervallo molto vasto, da ¼" a 4", garantendo accoppiamenti ottimali con praticamente tutti i tipi di tubi disponibili sul mercato dell'idrotermosanitaria e quello industriale.

FILETTATURE

I raccordi G.T.COMIS immessi sul mercato con il nostro marchio RACCORDERIE EMILIANE, possono essere realizzati con accoppiamento secondo UNI EN 10226-1 o secondo UNI EN ISO 228-1. Tutte le filettature sono sbavate.

• FILETTATURA UNI EN ISO 228-1 per i raccordi

Nella filettatura conforme alla norma ISO 228-1 l'accoppiamento non è a tenuta sul filetto ed entrambe le filettature sono cilindriche.

• FILETTATURA UNI EN 10226-1 (ex ISO 7) per raccordi serie navale

Nella filettatura conforme alla norma UNI EN 10226-1 (ex ISO 7) l'accoppiamento è a tenuta sul filetto. La filettatura è del tipo conico per l'esterno (maschio) e cilindrica per quella interna (femmina) ed è quindi perfettamente idonea alla realizzazione di impianti di distribuzione di gas combustibili secondo quanto disposto dalle norme EN 1775 ed UNI 7129.

Nel caso di accoppiamento con tubi in acciaio, **si raccomanda l'utilizzo di sigillanti liquidi anaerobici o nastro di politetrafluoruro di etilene o altri idonei materiali in alternativa alla canapa, evitando coppie di serraggio troppo elevate che potrebbero portare, avendo il raccordo un filetto conico, alla rottura dello stesso**.

Le giunzioni con tubi di rame possono essere realizzate mediante giunzione meccanica, tenendo presente che giunzioni e raccordi meccanici non devono essere impiegati nelle tubazioni sotto traccia ed in quelle interrate. I raccordi con cui si esegue l'accoppiamento possono essere di rame, di ottone o di bronzo (secondo UNI EN ISO 4063 ed UNI EN 1254-1).

PRESSIONE MASSIMA DI ESERCIZIO

Nel prospetto che segue sono riportate le pressioni ammissibili per i raccordi filettati in funzione del loro diametro e della temperatura di esercizio.

INTRODUCTION

G.T.COMIS offers to its customers a complete range of brass threaded fittings.
The available dimensions cover a very wide range, from ¼" to 4", ensuring optimal couplings with practically all types of pipes available on the plumbing and industrial markets.

THREADS

GT COMIS fittings placed on the market under our RACCORDERIE EMILIANE brand can be made with couplings according to UNI EN 10226-1 or according to UNI EN ISO 228-1. All threads are deburred.

• UNI EN ISO 228-1 THREAD for fittings

In threading compliant with ISO 228-1 the coupling is not sealed on the thread and both threads are cylindrical.

• UNI EN 10226-1 THREAD (formerly ISO 7) for heavy type fittings

In threads compliant with UNI EN 10226-1 (ex ISO 7) the coupling is sealed on the thread. The thread is of the conical type for the external one (male) and cylindrical for the internal one (female) and is therefore perfectly suitable for the construction of combustible gas distribution systems in accordance with the provisions of the EN 1775 and UNI 7129 standards.

In the case of coupling with steel pipes, **it is recommended to use anaerobic liquid sealants or ethylene polytetrafluoride tape or other suitable materials as an alternative to hemp, avoiding excessively high tightening torques which could lead, given the connection has a conical thread, upon its breakage**.

Joints with copper pipes can be made using mechanical jointing, keeping in mind that mechanical joints and fittings must not be used in underground and underground pipes. The fittings with which the coupling is carried out can be made of copper, brass or bronze (according to UNI EN ISO 4063 and UNI EN 1254-1).

MAXIMUM WORKING PRESSURE

The table below shows the allowable pressures for threaded fittings based on their diameter and operating temperature.

DIMENSIONS	MAXIMUM PRESSURE - BAR	
	Up to 120° C	Up to 225° C
from ¼" to ¾"	25	16
from 1" to 2"	16	10
from 2 ½" to 4"	10	6

MATERIALE

La lega di ottone utilizzata per i raccordi è conforme al DM 174 del 06/04/2004 e pertanto sono idonei all'utilizzo negli impianti fissi di captazione, trattamento, adduzione e distribuzione delle acque destinate al consumo umano. I componenti sono:

MATERIAL

The brass alloy used for the fittings complies with Ministerial Decree 174 of 06/04/2004 and is therefore suitable for use in fixed systems for the collection, treatment, supply and distribution of water intended for human consumption. The components are:

			IMPURITIES		
Cu	Pb	Zn	Arsenico (As) + Antimonio (Sb)	Cadmio (Cd)	Nichel
55-64%	≤ 3.5%	il resto	≤ 0.15%	≤ 0.01%	≤ 0.3%

La maggior parte dei raccordi possono essere offerti anche nella versione cromata e nella versione nichelata.

Most of the fittings can also be offered in chrome-plated and nickel-plated versions.



OTTONE GIALLO | yellow brass

RACCORDI FILETTATI | threaded fittings

	**Gomiti 90°** 90° Elbows		14-15
	**Bocchettoni curvi** Conic seat bent pipe unions		16
	**Semicurve** Elbows 45°		16-17
	**Dadi, giunti e riduzioni per condizionamento**/ air condit. fittings	NEW	17
	**Tee** Tees		18
	**Croci** Crosses		19
	**Manicotti** Couplings		19
	**Nipples** Nipples		20
	**Tappi** Plugs		20-21
	**Bocchettoni sede conica** Conic pipe unions		21
	**Tuttavite** Nipples		22
	**Distribuzione 4 vie** 4 Ways distributions		22
	**Riduzioni** Reducers		23-24
	**Curve 90°** 90° Bends		24
	**Bocchettoni c/oring** O-ring seal straight pipe unions		25
	**Bocchettoni sede piana** Straight fittings		25
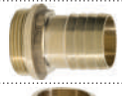	**Portagomma** Hose connectors		26-27
	**Prolunghe** Extensions		28-29
	**Barilotti** Barrel nipples		30
	**Raccordi per pompe excelsior** Excelsior pump bent pipe fittings		31
	**Pilette per cassoni** Tank drains		32
	**Ghiere/controdadi** Reducer/ lock nuts		33
	**Raccordi contatore acqua** Water meter pipe fittings		34

ART. 2

- R E -

Gomito 90° F.F.

F.F. yellow brass elbow joint

Material: Yellow brass CW617N
Thread: UNI EN ISO 228/1
Norm: DM 174 06/04/2004

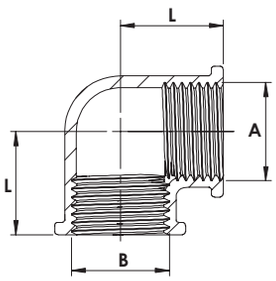



Fig. 90

Codice - *Code*	Ø AxB	L mm	Conf. - *Pack*		€ Cad. - *€ each*
1185056	1/4"	17,0	10	300	
1185057	3/8"	21,0	10	200	
1185058	1/2"	22,0	10	140	
1185059	3/4"	24,8	10	80	
1185060	1"	31,8	10	60	
1185061	1"1/4	42,8	1	35	
1185062	1"1/2	46,4	1	25	
1185063	2"	55,5	1	15	
1185064	2"1/2	68,2	1	5	
1185065	3"	73,0	1	4	
1185067	4"	95,7	1	1	

ART. 4

- R E -

Gomito 90° F.F.

F.F. yellow brass elbow joint

Material: Yellow brass CW617N
Thread: UNI EN ISO 228/1
Norm: DM 174 06/04/2004

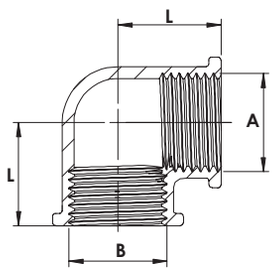



Fig. 90
NAVALE E GAS

Codice - *Code*	Ø AxB	L mm	Conf. - *Pack*		€ Cad. - *€ each*
1185092	1/2"	26,5	10	140	
1185093	3/4"	47,0	10	80	
1185094	1"	42,0	5	50	

ART. 6

- R E -

Gomito 90° F.F. ridotto

F.F. yellow brass reduced elbow joint

Material: Yellow brass CW617N
Thread: UNI EN ISO 228/1
Norm: DM 174 06/04/2004

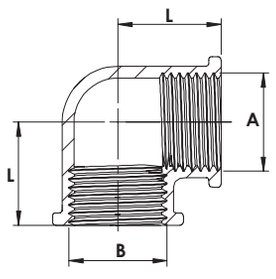



Fig. 90R

Codice - *Code*	Ø AxB	L mm	Conf. - *Pack*		€ Cad. - *€ each*
1185070	1/2"x3/4"	27,5	10	90	
1185071	1/2"x1"	33,0	5	50	
1185072	3/4"x1"	33,0	5	45	

ART. 8

- R E -

Gomito 90° M.F.

M.F. yellow brass elbow joint

Material: Yellow brass CW617N
Thread: UNI EN ISO 228/1
Norm: DM 174 06/04/2004

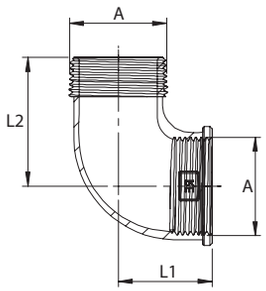



Fig. 92

Codice - *Code*	Ø AxB	L1 mm	L2 mm	Conf. - *Pack*		€ Cad. - *€ each*
1185256	1/4"	20,0	25,0	10	430	
1185257	3/8"	21,0	28,0	10	300	
1185258	1/2"	25,0	30,1	10	170	
1185259	3/4"	26,8	34,2	10	100	
1185260	1"	38,6	47,0	10	50	
1185261	1"1/4	40,3	55,2	5	35	
1185262	1"1/2	45,3	65,4	1	25	
1185263	2"	53,3	66,5	1	15	
1185264	2"1/2	68,2	85,2	1	6	
1185265	3"	73,0	90,5	1	4	
1185267	4"	95,7	105,0	1	1	

ART. 10

- R E -

Gomito 90° M.F.

M.F. yellow brass elbow joint

Material: Yellow brass CW617N
Thread: UNI EN 10226-1 (ex iso 7/1)
Norm: DM 174 06/04/2004

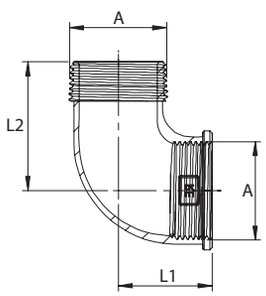



Fig. 92
NAVALE E GAS

Codice - *Code*	Ø A	L1 mm	L2 mm	Conf. - *Pack*		€ Cad. - *€ each*
1185292	1/2"	28,0	34,5	10	160	
1185293	3/4"	32,3	40,2	10	80	
1185294	1"	38,2	49,0	5	60	

ART. 12

- R E -

Gomito con flangia M.F. e F.F.

M.F. and F.F. yellow brass elbow joint with flange

Material: Yellow brass CW617N
Thread: UNI EN ISO 228/1
Norm: DM 174 06/04/2004

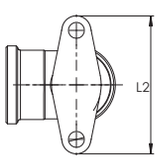

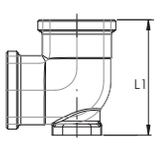



Codice - *Code*	Ø	L1 mm	L2 mm	Conf. - *Pack*		€ Cad. - *€ each*
1181808	M.F. 1/2"	40,5	47,8	10	50	
1185073	F.F. 1/2"	40,0	47,8	10	150	

ART. 14

- R E -

Bocchettone a gomito F.F. sede conica

F.F. yellow brass conic seat bent pipe union

Material: Yellow brass CW617N
Thread: UNI EN 10226-1 (ex iso 7/1)
Norm: DM 174 06/04/2004

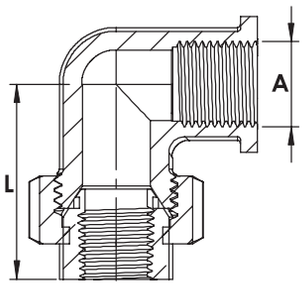



Fig. 96

Codice - *Code*	Ø A	L mm	Conf. - *Pack*		€ Cad. - *€ each*
1186158	1/2"	53,0	5	50	
1186159	3/4"	59,2	5	40	
1186160	1"	65,9	1	25	
1186161	1"1/4	76,6	1	15	
1186162	1"1/2	81,6	1	15	
1186163	2"	90,0	1	8	

ART. 16

- R E -

Bocchettone a gomito M.F. sede conica

M.F. yellow brass conic seat bent pipe union

Material: Yellow brass CW617N
Thread: UNI EN 10226-1 (ex iso 7/1)
Norm: DM 174 06/04/2004

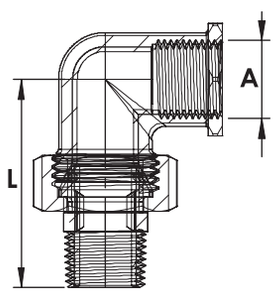



Fig. 98

Codice - *Code*	Ø A	L mm	Conf. - *Pack*		€ Cad. - *€ each*
1186108	1/2"	70,5	5	50	
1186109	3/4"	80,0	5	40	
1186110	1"	87,0	1	25	
1186111	1"1/4	101,9	1	15	
1186112	1"1/2	104,0	1	8	
1186113	2"	117,6	1	6	

ART. 18

- R E -

Gomito a 45° F.F.

F.F. yellow brass elbow 45°

Material: Yellow brass CW617N
Thread: UNI EN ISO 228/1
Norm: DM 174 06/04/2004

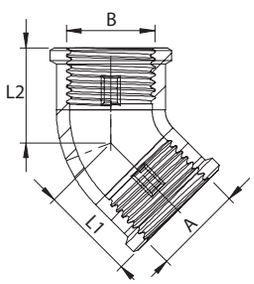



Fig. 120

Codice - *Code*	Ø AxB	L1 mm	L2 mm	Conf. - *Pack*		€ Cad. - *€ each*
1188008	1/2"	22,4	22,4	10	150	
1188009	3/4"	24,7	24,7	10	100	
1188010	1"	26,2	26,2	10	70	
1188011	1"1/4	30,1	30,1	5	30	
1188012	1"1/2	36,0	36,0	1	25	
1188013	2"	38,2	38,2	1	15	

ART. 20 - R E -

Gomito a 45° M.F.

M.F. yellow brass elbow 45°

Material: Yellow brass CW617N
Thread: Male UNI EN 10226-1, female UNI EN ISO 228/1
Norm: DM 174 06/04/2004

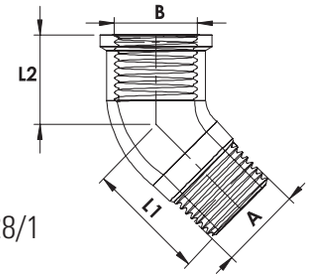



Fig. 121

Codice - *Code*	Ø AxB	L1 mm	L2 mm	Conf. - *Pack*		€ Cad. - *€ each*
1188108	1/2"	30,3	22,8	10	150	
1188109	3/4"	33,7	23,0	10	100	
1188110	1"	38,6	26,8	10	60	
1188111	1"1/4	45,8	33,0	1	35	
1188112	1"1/2	45,8	38,1	1	30	
1188113	2"	53,1	42,5	1	15	

RACCORDI IN OTTONE GIALLO PER CONDIZIONAMENTO

ART. 21A - R E - NEW

Dado per giunti in ottone

Yellow brass short nut

Material: Yellow brass CW617N
Thread: UNI EN ISO 228/1

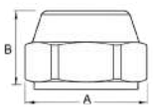

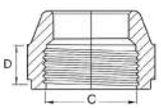



Codice - *Code*	Ø AxB	A mm	B mm	C mm	D mm	Conf. - *Pack*		€ Cad. - *€ each*
NEW 0273416	1/4"	17	15	1/4"	9	10	100	
NEW 0273417	3/8"	22	18,5	3/8"	10,5	10	100	
NEW 0273418	1/2"	25	19,5	1/2"	11,5	10	100	

ART. 21B - R E - NEW

Giunto M.M. e giunto ridotto

Yellow brass union M.M.

Material: Yellow brass CW617N
Thread: UNI EN ISO 228/1



Codice - *Code*	Ø AxB	A mm	B mm	C mm	D mm	E mm	F mm	Conf. - *Pack*		€ Cad. - *€ each*
NEW 0273426	1/4" x 1/4"	12	35	1/4"	12,5	1/4"	12,5	10	100	
NEW 0273427	3/8" x 3/8"	17	44	3/8"	15	3/8"	15	10	100	
NEW 0273428	1/2" x 1/2"	20	50	1/2"	18	1/2"	18	10	100	
NEW 0273436	1/4" x 3/8"	17	40	3/8"	15	1/4"	13	10	100	
NEW 0273437	3/8" x 1/2"	20	48	1/2"	18	3/8"	15	10	100	

ART. 21C - R E - NEW

Riduzione M.F.

Yellow brass M.F. reduction

Material: Yellow brass CW617N
Thread: UNI EN ISO 228/1

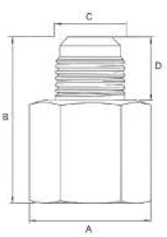

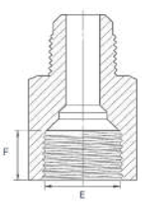



Codice - *Code*	Ø AxB	A mm	B mm	C mm	D mm	E mm	F mm	Conf. - *Pack*		€ Cad. - *€ each*
NEW 0273456	1/4"Mx3/8"F	22	33	3/8"	13	1/4"	11	10	100	
NEW 0273457	3/8"Mx1/4"F	16	26	1/4"	11,5	3/8"	10	10	100	
NEW 0273467	3/8"Mx1/2"F	25	39	1/2"	15	3/8"	11,5	10	100	
NEW 0273458	1/2"Mx3/8"F	22	38	3/8"	18	1/2"	11	10	100	

ART. 22

- R E -

Tee F.F.F.

TEE yellow brass

Material: Yellow brass CW617N
Thread: UNI EN ISO 228/1
Norm: DM 174 06/04/2004

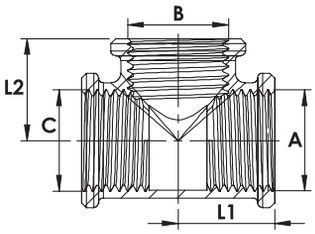



Fig. 130

Codice - *Code*	Ø AxBxC	L1 mm	L2 mm	Conf. - *Pack*		€ Cad. - *€ each*
1185456	1/4"	17,7	17,5	10	200	
1185457	3/8"	21,0	21,1	10	160	
1185458	1/2"	22,5	21,1	10	120	
1185459	3/4"	25,4	25,3	10	70	
1185460	1"	30,8	32,0	5	40	
1185461	1"1/4	41,9	41,0	1	25	
1185462	1"1/2	46,8	47,0	1	20	
1185463	2"	52,5	51,0	1	10	
1185464	2"1/2	70,0	70,0	1	4	
1185465	3"	75,0	75,0	1	4	
1185467	4"	92,5	92,5	1	1	

ART. 24

- R E -

Tee F.F.F.

TEE yellow brass

Material: Yellow brass CW617N
Thread: UNI EN ISO 228/1
Norm: DM 174 06/04/2004

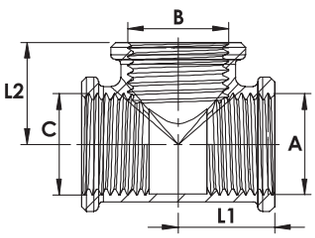



Fig. 130
NAVALE E GAS

Codice - *Code*	Ø AxBxC	L1 mm	L2 mm	Conf. - *Pack*		€ Cad. - *€ each*
1185492	1/2"	24,8	24,9	10	100	
1185493	3/4"	30,3	30,3	10	60	
1185494	1"	34,9	35,5	5	35	

ART. 26

- R E -

Tee F.F.F. ridotto

Reduced TEE yellow brass

Material: Yellow brass CW617N
Thread: UNI EN ISO 228/1
Norm: DM 174 06/04/2004

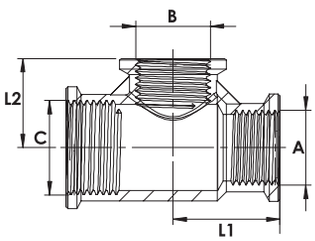



Fig. 130R

Codice - *Code*	Ø AxBxC	L1 mm	L2 mm	Conf. - *Pack*		€ Cad. - *€ each*
1185470	3/4"x1/2"x3/4"	30,0	25,0	10	100	
1185469	3/4"x1/2"x1/2"	26,0	25,6	10	80	
1185471	1"x1/2"x1"	27,5	29,6	5	60	
1185485	1"x1"x1/2"	32,5	32,5	10	20	
1185472	1"x3/4"x1"	37,0	36,9	5	50	

ART. 28

- R E -

Croce
Yellow brass cross

Material: Yellow brass CW617N
Thread: UNI EN ISO 228/1
Norm: DM 174 06/04/2004

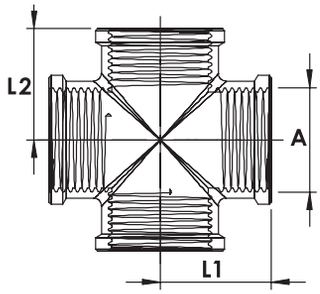



Fig. 180

Codice - *Code*	Ø A	L1 mm	L2 mm	Conf. - *Pack*		€ Cad. - *€ each*
1186758	1/2"	23,4	23,4	10	80	
1186759	3/4"	28,3	28,3	5	50	
1186760	1"	35,0	35,0	1	30	
1186761	1"1/4	40,0	40,0	1	20	
1186762	1"1/2	46,5	46,5	1	15	
1186763	2"	56,5	56,5	1	7	

ART. 30

- R E -

Manicotto
Yellow brass coupling

Material: Yellow brass CW617N
Thread: UNI EN ISO 228/1
Norm: DM 174 06/04/2004

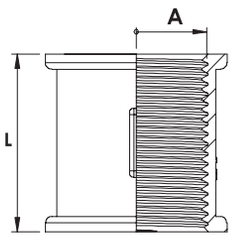



Fig. 270

Codice - *Code*	Ø A	L mm	Conf. - *Pack*		€ Cad. - *€ each*
1185656	1/4"	17,5	10	900	
1185657	3/8"	30,0	10	500	
1185658	1/2"	30,0	10	300	
1185659	3/4"	33,0	10	150	
1185660	1"	30,5	10	150	
1185661	1"1/4	36,2	1	100	
1185662	1"1/2	40,0	1	50	
1185663	2"	50,0	1	30	





TUTTI I NOSTRI RACCORDI SONO DISPONIBILI, SU RICHIESTA, ANCHE NELLA VERSIONE

NICHELATA

ALL BRASS FITTINGS AVAILABLE, ON REQUEST, NICKEL-PLATED





ART. 32

- R E -

Nipples doppio
Yellow brass nipples

Material: Yellow brass CW617N
Thread: UNI EN ISO 228/1
Norm: DM 174 06/04/2004

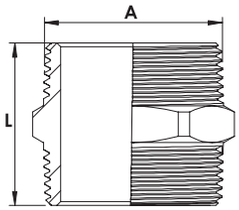



Fig. 280

Codice - *Code*	Ø A	L mm	Conf. - *Pack*		€ Cad. - *€ each*
1185856	1/4"	22,3	50	1200	
1185857	3/8"	28,0	10	400	
1185858	1/2"	29,3	10	380	
1185859	3/4"	30,4	10	240	
1185860	1"	34,5	10	140	
1185861	1"1/4	39,6	10	80	
1185862	1"1/2	41,0	1	65	
1185863	2"	52,2	1	35	
1185884	2"1/2	61,4	1	12	
1185885	3"	64,0	1	10	
1185887	4"	68,3	1	2	

ART. 34

- R E -

Nipples doppio
Yellow brass nipples

Material: Yellow brass CW617N
Thread: UNI EN 10226-1 (ex iso 7/1)
Norm: DM 174 06/04/2004

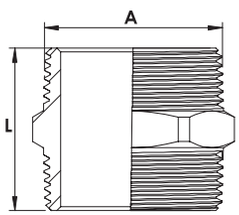



Fig. 280
NAVALE E GAS

Codice - *Code*	Ø A	L mm	Conf. - *Pack*		€ Cad. - *€ each*
1185892	1/2"	40,0	10	260	
1185893	3/4"	43,9	10	150	
1185894	1"	47,4	10	80	
1185895	1" 1/4	51,0	1	65	
1185896	1" 1/2	57,0	1	40	

ART. 36

- R E -

Tappo vite maschio
Yellow brass M plug

Material: Yellow brass CW617N
Thread: UNI EN ISO 228/1
Norm: DM 174 06/04/2004

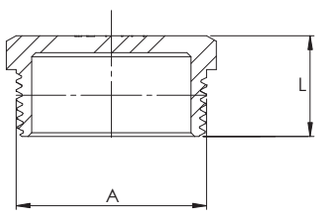



Fig. 290

Codice - *Code*	Ø A	L mm	Conf. - *Pack*		€ Cad. - *€ each*
1185756	1/4"	14,0	10	1500	
1185757	3/8"	15,0	10	750	
1185758	1/2"	19,5	10	520	
1185759	3/4"	17,3	10	400	
1185760	1"	20,2	10	230	
1185761	1"1/4	35,6	10	100	
1185762	1"1/2	25,3	6	90	
1185763	2"	33,1	1	50	

ART. 38

- R E -

Calotta / Tappo femmina
Yellow brass F cap

Material: Yellow brass CW617N
Thread: UNI EN ISO 228/1
Norm: DM 174 06/04/2004

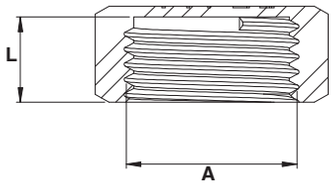



Fig. 300

Codice - *Code*	Ø A	L mm	Conf. - *Pack*		€ Cad. - *€ each*
1186556	1/4"	10,8	10	1800	
1186557	3/8"	9,7	10	600	
1186558	1/2"	11,0	10	600	
1186559	3/4"	10,5	10	350	
1186560	1"	13,5	10	200	
1186561	1"1/4	14,1	10	150	
1186562	1"1/2	15,6	10	100	
1186563	2"	20,0	1	60	

ART. 40

- R E -

Bocchettone diritto F.F. sede conica
Yellow brass F.F. conic pipe union

Material: Yellow brass CW617N
Thread: UNI EN 10226-1 (ex iso 7/1)
Norm: DM 174 06/04/2004

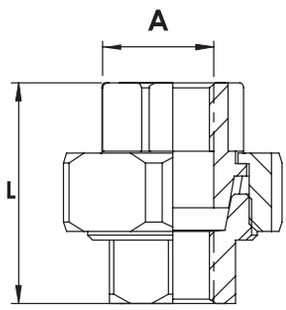



Fig. 340

Codice - *Code*	Ø A	L mm	Conf. - *Pack*		€ Cad. - *€ each*
1185158	1/2"	45,2	10	80	
1185159	3/4"	46,3	10	60	
1185160	1"	50,4	5	40	
1185161	1"1/4	58,5	1	30	
1185162	1"1/2	67,5	1	20	
1185163	2"	68,1	1	15	
1185164	2"1/2	90,2	1	10	

ART. 42

- R E -

Bocchettone diritto M.F. sede conica
Yellow brass M.F. conic pipe union

Material: Yellow brass CW617N
Thread: UNI EN 10226-1 (ex iso 7/1)
Norm: DM 174 06/04/2004

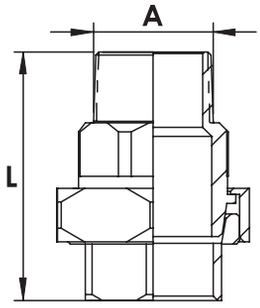



Fig. 341

Codice - *Code*	Ø A	L mm	Conf. - *Pack*		€ Cad. - *€ each*
1185108	1/2"	62,7	10	70	
1185109	3/4"	67,1	5	50	
1185110	1"	71,5	1	35	
1185111	1"1/4	83,8	1	20	
1185112	1"1/2	89,9	1	15	
1185113	2"	95,6	1	10	
1185114	2" 1/2	125,0	1	10	

ART. 44

- R E -

Tuttavite
Yellow brass nipple

Material: Yellow brass CW617N
Thread: UNI EN ISO 228/1
Norm: DM 174 06/04/2004

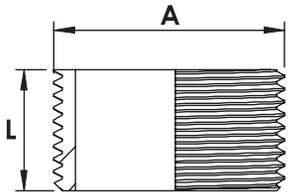



Fig. 531

Codice - *Code*	Ø A	L mm	Conf. - *Pack*		€ Cad. - *€ each*
1185873	1/2"	30,0	10	450	
1185874	3/4"	30,0	10	250	
1185875	1"	33,0	10	180	
1185876	1"1/4	40,0	1	80	
1185877	1"1/2	45,0	1	75	
1185878	2"	50,0	1	10	

ART. 46

- R E -

Distribuzione a 4 vie
Yellow brass 4 ways distribution

Material: Yellow brass CW617N
Thread: UNI EN ISO 228/1
Norm: DM 174 06/04/2004

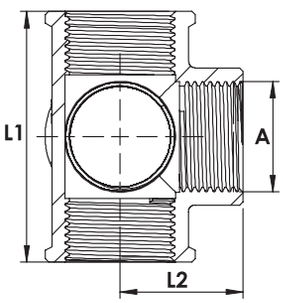



Fig. 223

Codice - *Code*	Ø A	L1 mm	L2 mm	Conf. - *Pack*		€ Cad. - *€ each*
1186608	1/2"	54,0	27,0	10	60	
1186609	3/4"	65,0	34,1	10	40	
1186610	1"	75,5	37,0	5	25	
1186611	1"1/4	88,0	44,0	1	15	
1186612	1"1/2	97,0	50,5	1	10	







ART. 48

- R E -

Manicotto ridotto F.F.

Yellow brass reducing coupling

Material: Yellow brass CW617N
Thread: UNI EN ISO 228/1
Norm: DM 174 06/04/2024

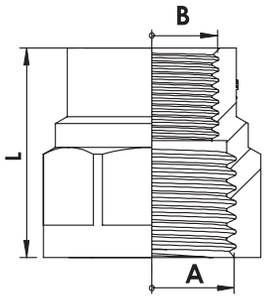



Fig. 240

Codice - *Code*	Ø AxB	L mm	Conf. - *Pack*		€ Cad. - *€ each*
1185558	1/2"x3/8"	27,0	10	340	
1185559	3/4"x1/2"	30,2	10	150	
1185560	1"x1/2"	31,2	10	120	
1185561	1"x3/4"	32,0	10	100	
1185562	1"1/4x1"	38,9	10	60	
1185564	1"1/2x1"	37,2	10	40	
1185563	1"1/2x1"1/4	39,5	10	40	
1185565	2"x1"1/4	37,0	5	20	
1185566	2"x1"1/2	50,0	5	40	

ART. 50

- R E -

Riduzione M.F.

Yellow brass reducer

Material: Yellow brass CW617N
Thread: UNI EN ISO 228/1
Norm: DM 174 06/04/2024

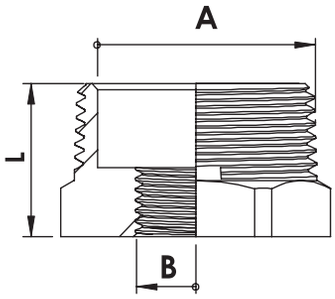



Fig. 241

Codice - *Code*	Ø AxB	L mm	Conf. - *Pack*		€ Cad. - *€ each*
1186453	1/4"x1/8"	12,4	50	1550	
1186469	3/8"x1/4"	15,1	50	1250	
1186455	1/2"x1/4"	17,2	10	600	
1186457	1/2"x3/8"	16,6	10	600	
1186454	3/4"x3/8"	21,6	10	300	
1186458	3/4"x1/2"	18,7	10	350	
1186448	1"x3/8"	20,5	10	150	
1186463	1"x1/2"	20,5	10	180	
1186459	1"x3/4"	20,5	10	180	
1186471	1"1/4x1/2"	22,8	10	100	
1186450	1"1/4x3/4"	24,8	10	100	
1186460	1"1/4x1"	26,0	10	100	
1186468	1"1/2x1/2"	24,5	10	80	
1186451	1"1/2x3/4"	27,4	10	80	
1186470	1"1/2x1"	24,8	10	90	
1186461	1"1/2x1"1/4	26,8	1	100	
1186464	2"x1"	31,1	1	50	
1186465	2"x1"1/4	30,0	1	60	
1186462	2"x1"1/2	30,0	1	50	
1186473	2"1/2x2"	40,0	1	30	
1186474	3"x2"	42,5	1	20	
1186480	4"x3"	50,7	1	10	

ART. 52

- R E -

Nipples doppio ridotto
Yellow brass reducing nipple

Material: Yellow brass CW617N
Thread: UNI EN ISO 228/1
Norm: DM 174 06/04/2004

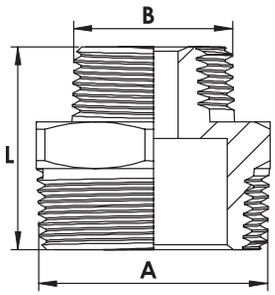



Fig. 245

Codice - *Code*	Ø AxB	L mm	Conf. - *Pack*		€ Cad. - *€ each*
1186053	1/4"x1/8"	23,0	10	400	
1186057	3/8"x1/4"	25,0	10	400	
1186056	1/2"x1/4"	24,5	10	400	
1186058	1/2"x3/8"	27,4	10	400	
1186062	3/4"x3/8"	27,8	10	200	
1186059	3/4"x1/2"	29,6	10	280	
1186061	1"x1/2"	35,2	10	130	
1186060	1"x3/4"	32,9	10	130	
1186067	1"1/4x3/4"	39,1	10	80	
1186068	1"1/4x1"	37,2	10	90	
1186065	1"1/2x3/4"	36,9	10	50	
1186073	1"1/2x1"	44,5	1	90	
1186069	1"1/2x1"1/4	44,5	1	60	
1186070	2"x1"	42,3	1	50	
1186071	2"x1"1/4	47,0	1	40	
1186072	2"x1"1/2	48,8	1	40	
1186075	2" 1/2x2"	62,3	1	30	

ART. 54

Curva 90° M.F.
M.F. 90° bend

Material: Yellow brass CW617N
Thread: UNI EN ISO 228/1
Norm: DM 174 06/04/2004

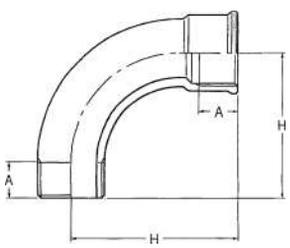



Fig. 1

Codice - *Code*	Ø	H mm	A mm	Conf. - *Pack*		€ Cad. - *€ each*
1185275	1/2"	45	13,0	25	25	
1185274	3/4"	55	14,5	15	15	
1185296	1"	70	17,0	15	15	
1185271	1"1/4	90	19,0	15	15	
1185282	1"1/2	100	19,0	10	10	
1185283	2"	120	23,5	3	3	

ART. 56

Curva 90° F.F.
F.F. 90° bend

Material: Yellow brass CW617N
Thread: UNI EN ISO 228/1
Norm: DM 174 06/04/2004

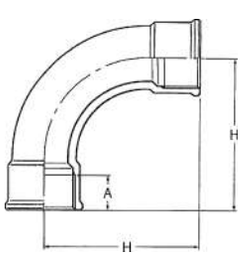



Fig. 2

Codice - *Code*	Ø	H mm	A mm	Conf. - *Pack*		€ Cad. - *€ each*
1185277	1/2"	45	13	25	25	
1185299	3/4"	55	14,5	15	15	
1185295	1"	70	17	15	15	
1185272	1"1/4"	90	19	15	15	
1185297	1"1/2"	100	19	10	10	
1185273	2"	120	23,5	3	3	

ART. 58

- R E -

CON O-RING

Bocchettone diritto M.F.

O-ring seal straight yellow brass pipe union

Material: Yellow brass CW617N
Thread: UNI EN ISO 228/1
Norm: DM 174 06/04/2004

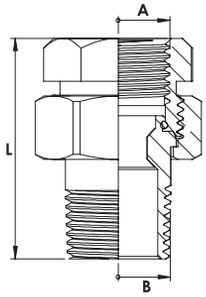



Codice - *Code*	Ø AxB	L mm	Conf. - *Pack*		€ Cad. - *€ each*
1181207	3/8"	41,0	10	200	
1181208	1/2"	44,5	10	150	
1181209	3/4"	50,3	10	80	
1181210	1"	57,6	10	50	
1181211	1"1/4	66,9	1	40	
1181212	1"1/2	75,0	1	25	
1181213	2"	84,0	1	10	

ART. 60

- R E -

CON O-RING

Bocchettone curvo M.F.

O-ring seal bent yellow brass pipe union

Material: Yellow brass CW617N
Thread: UNI EN ISO 228/1
Norm: DM 174 06/04/2004

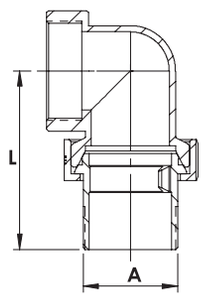



Codice - *Code*	Ø A	L mm	Conf. - *Pack*		€ Cad. - *€ each*
1181407	3/8"	45,0	10	100	
1181408	1/2"	48,3	10	100	
1181409	3/4"	61,3	10	60	
1181410	1"	71,1	5	35	
1181411	1"1/4	74,6	1	20	
1181412	1"1/2	91,4	1	15	
1181413	2"	101,0	1	6	

ART. 62

- R E -

SEDE PIANA

Bocchettone diritto M.F. 3 pezzi sede piana con guarnizione

3 pcs straight fitting M.F. with gasket

Material: Yellow brass CW617N
Thread: UNI EN ISO 228/1
Norm: DM 174 06/04/2004

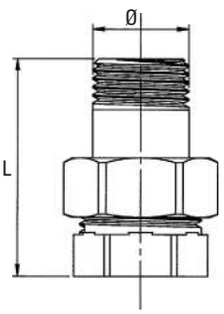



Codice - *Code*	Ø	L mm	Conf. - *Pack*		€ Cad. - *€ each*
1181658	1/2"	47,5	10	150	
1181659	3/4"	52,0	10	100	
1181660	1"	59,0	5	50	
1181661	1"1/4	64,0	5	40	
1181662	1"1/2	76,0	5	20	
1181663	2"	83,5	1	15	

ART. 64

- R E -

Raccordo portagomma tipo ROMA maschio

ROMA male hose connector

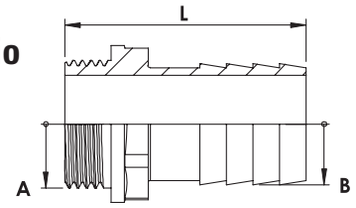



Material: Yellow brass CW617N
Thread: UNI EN ISO 228/1
Norm: DM 174 06/04/2004

Codice - *Code*	Ø AxB	L mm	Conf. - *Pack*		€ Cad. - *€ each*
2346398	1/4"x10	33	50	1200	
2346404	3/8"x10	35	40	680	
2346406	3/8"x13	38	10	530	
2346407	3/8"x15	39	10	500	
2346370	3/8"x16	40	10	500	
2346371	3/8"x18	40	10	500	
2346372	3/8"x20	41	10	280	
2346411	1/2"x10	39	10	280	
NEW 2346492	1/2"x13	41	10	280	
2346413	1/2"x14	39	10	360	
2346412	1/2"x15	42,6	10	330	
2346446	1/2"x16	44	10	340	
2346414	1/2"x18	46	10	340	
2346418	1/2"x20	40	10	300	
2346493	3/4"x19	53	10	250	
2346409	3/4"x20	47	10	200	
2346408	3/4"x25	50	10	120	
2346450	1"x20	55	10	170	
2346410	1"x25	54	10	100	
2346416	1"x30	55	10	100	
2346452	1"x35	59	10	80	
2346422	1"1/4x30	59	10	80	
2346423	1"1/4x35	65,5	10	80	
2346454	1"1/4x39	70	10	60	
2346424	1"1/4x40	59	10	55	
2346456	1"1/4x45	70	10	50	
2346457	1"1/2x38	76	10	60	
2346420	1"1/2x40	67	15	60	
2346421	1"1/2x45	74	10	40	
2346444	1"1/2x50	70	1	35	
2346460	2"x50	77	1	35	
2346462	2"x60	95	1	20	
2346461	2"1/2x60	95	1	15	
2346466	3"x80	103	2	10	
2346468	4"x100	123	1	2	

ART. 66

- R E -

Raccordo portagomma tipo ROMA maschio

ROMA heavy male hose connector

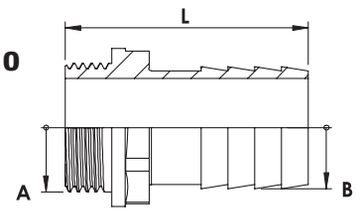



Material: Yellow brass CW617N
Thread: UNI EN ISO 228/1
Norm: DM 174 06/04/2004

NAVALE E GAS

Codice - *Code*	Ø AxB	L mm	Conf. - *Pack*		€ Cad. - *€ each*
2346512	1/2"x16	48,0	10	240	
2346518	1/2"x20	50,0	10	250	
2346509	3/4"x20	51,0	10	200	
2346508	3/4"x25	57,0	10	140	
2346510	1"x25	58,5	10	100	
2346516	1"x30	58,5	10	100	
2346523	1"1/4x35	64,0	1	75	
2346524	1"1/4x40	67,0	1	60	
2346520	1"1/2x40	70,0	1	50	
2346560	2"x50	75,0	1	35	

ART. 68

- R E -

Raccordo portagomma tipo Roma femmina
Roma Female hose connector

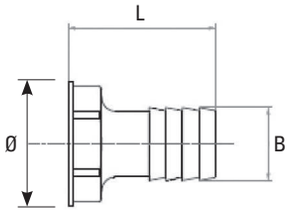



Material: Yellow brass CW617N
Thread: UNI EN ISO 228/1
Norm: DM 174 06/04/2004

Codice - *Code*	Ø x B	L mm	Conf. - *Pack*		€ Cad. - *€ each*
2346470	1/4"x13	33,0	10	50	
2346472	3/8"x15	38,0	10	30	
2346429	1/2"x15	39,0	10	50	
2346431	1/2"x18	39,0	10	40	
2346434	3/4"x20	44,0	10	25	
2346435	3/4"x25	45,0	10	20	
2346438	1"x25	52,0	10	30	
2346439	1"x30	52,0	10	25	
2346442	1"1/4x35	58,0	1	15	
2346443	1"1/2x40	60,0	1	12	
2346480	2"x50	77,0	1	6	

ART. 70

Portagomma giallo Maschio per gas-GPL
Straight M yellow hose connector

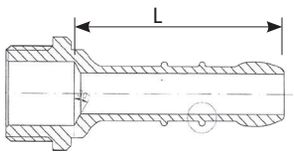



Material: Yellow brass CW617N
Thread: UNI EN 10226-1 (ex iso 7/1)
Norm: DM 174 06/04/2004

Codice - *Code*	**per gas** GAS hose connector	L mm	Conf. - *Pack*	€ Cad. - *€ each*
2361007	3/8"x13	61	20	
2361008	1/2"x13	63	30	
Codice - *Code*	**per GPL** LPG hose connector	L mm	Conf. - *Pack*	€ Cad. - *€ each*
2361407	3/8"x8	46,5	20	
2361408	1/2"x8	47,0	30	

ART. 72

Portagomma giallo Femmina per gas-GPL
Straight F yellow hose connector

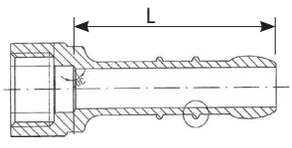



Material: Yellow brass CW617N
Thread: UNI EN 10226-1 (ex iso 7/1)
Norm: DM 174 06/04/2004

Codice - *Code*	**per gas** GAS hose connector	L mm	Conf. - *Pack*	€ Cad. - *€ each*
2361207	3/8"x13	61,0	20	
2361208	1/2"x13	63,0	30	
Codice - *Code*	**per GPL** LPG hose connector	L mm	Conf. - *Pack*	€ Cad. - *€ each*
2361607	3/8"x8	46,5	20	
2361608	1/2"x8	47,0	30	

ART. 74

- R E -

Prolunga
Yellow brass extension

Material: Yellow brass CW617N
Thread: UNI EN ISO 228/1
Norm: DM 174 06/04/2004

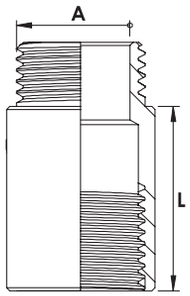



Codice - *Code*	Ø A	L cm	Conf. - *Pack*		€ Cad. - *€ each*
1187117	3/8"	1	10	500	
1187127	3/8"	2	10	400	
1187137	3/8"	3	10	400	
1187157	3/8"	5	10	210	
1187118	1/2"	1	10	400	
1187121	1/2"	1,5	10	350	
1187128	1/2"	2	10	250	
1187132	1/2"	2,5	10	200	
1187138	1/2"	3	10	200	
1187148	1/2"	4	10	150	
1187158	1/2"	5	10	150	
1187168	1/2"	6	10	100	
1187119	3/4"	1	10	350	
1187122	3/4"	1,5	10	270	
1187129	3/4"	2	10	200	
1187139	3/4"	3	10	150	
1187149	3/4"	4	10	150	
1187159	3/4"	5	10	100	
1187110	1"	1	10	160	
1187123	1"	1,5	10	150	
1187130	1"	2	10	100	
1187140	1"	3	10	90	

ART. 76

- R E -

Prolunga ridotta F.M.
FM yellow brass reduced extension

Material: Yellow brass CW617N
Thread: UNI EN ISO 228/1
Norm: DM 174 06/04/2004

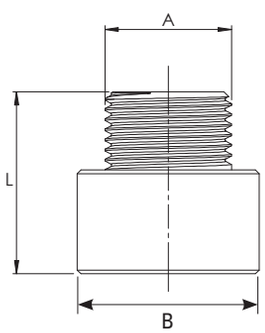



Codice - *Code*	Ø B x A	L mm	Conf. - *Pack*		€ Cad. - *€ each*
0168307	1/2"x3/8"	24	10	500	
0168308	3/4"x1/2"	24,0	10	320	
0168310	1"x1/2"	28,4	10	150	
0168309	1"x3/4"	28,0	10	150	

ART. 78

- R E -

Prolunga pesante
Yellow brass heavy extension

Material: Yellow brass CW617N
Thread: UNI EN ISO 228/1
Norm: DM 174 06/04/2004

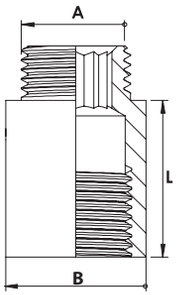



Codice - *Code*	Ø A	L cm	B mm	Conf. - *Pack*		€ Cad. - *€ each*
1187200	1/2"	1	26,5	10	450	
1187201	1/2"	1,5	26,5	10	350	
1187202	1/2"	2	26,5	10	250	
1187207	1/2"	2,5	26,5	10	200	
1187203	1/2"	3	26,5	10	150	
1187204	1/2"	4	26,5	10	150	
1187205	1/2"	5	26,5	10	120	
1187206	1/2"	6	26,5	10	100	
1187208	1/2"	8	26,5	10	100	
1187209	1/2"	10	26,5	10	90	
1187220	3/4"	1	31,5	10	300	
1187221	3/4"	1,5	31,5	10	240	
1187222	3/4"	2	31,5	10	200	
1187223	3/4"	3	31,5	10	150	
1187224	3/4"	4	31,5	10	110	
1187225	3/4"	5	31,5	10	90	
1187230	1"	1	38,5	10	170	
1187231	1"	1,5	38,5	10	150	
1187232	1"	2	38,5	10	100	
1187233	1"	3	38,5	10	100	
1187234	1"	4	38,5	10	50	
1187236	1"	5	38,5	10	50	

ART. 80

- R E -

Prolunga ridotta esagonale F.M.
Yellow brass hexagonal reduced extension

Material: Yellow brass CW617N
Thread: UNI EN ISO 228/1
Norm: DM 174 06/04/2004

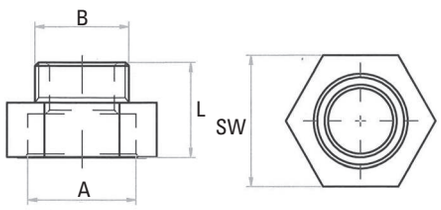



Codice - *Code*	Ø A x B	Altezza L mm	Chiave SW mm	Conf. - *Pack*	€ Cad. - *€ each*
0168303	3/8"x1/4"	22	21	10	
0168305	1/2"x1/4"	22	23	10	
0168357	1/2"x3/8"	22	23	10	
0168358	3/4"x1/2"	22	29,5	10	
0168359	1"x1/2"	24	36,5	10	
0168360	1"x3/4"	26	36,5	10	
0168311	1"1/4x1/2"	26	45	10	
0168314	1"1/4x3/4"	27	45	10	
0168312	1"1/4x1"	28	45	10	
0168316	1"1/2x1"	32	53	10	
0168313	1"1/2x1"1/4	32	53	10	

ART. 82

- R E -

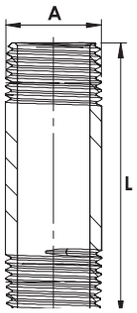



Barilotto 2 filetti
Yellow brass two thread barrel nipple

Material: Yellow brass CW617N
Thread: UNI EN ISO 228/1
Norm: DM 174 06/04/2004

Codice - *Code*	Ø A	L cm	Conf. - *Pack*		€ Cad. - *€ each*
1187308	1/2"	6	10	200	
1187418	1/2"	8	10	200	
1187408	1/2"	10	10	120	
1187438	1/2"	12	10	150	
1187458	1/2"	15	10	120	
1187478	1/2"	20	5	60	
1187309	3/4"	6	10	120	
1187419	3/4"	8	10	100	
1187409	3/4"	10	10	80	
1187439	3/4"	12	10	100	
1187459	3/4"	15	5	70	
1187479	3/4"	20	5	50	
1187310	1"	6	10	80	
1187420	1"	8	10	60	
1187410	1"	10	10	50	
1187440	1"	12	10	50	
1187460	1"	15	5	40	
1187480	1"	20	5	30	
1187311	1"1/4	6	10	60	
1187421	1"1/4	8	10	50	
1187411	1"1/4	10	10	40	
1187441	1"1/4	12	10	40	
1187461	1"1/4	15	5	30	
1187481	1"1/4	20	5	20	
1187422	1"1/2	8	10	40	
1187412	1"1/2	10	10	30	
1187462	1"1/2	15	5	20	
1187483	1"1/2	20	5	15	
1187423	2"	8	10	30	
1187413	2"	10	10	20	
1187463	2"	15	5	15	
1187484	2"	20	1	12	

ART. 84

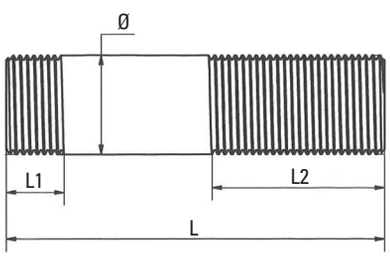



Barilotto scorrevole M.M.
Yellow brass sliding extension

Material: Yellow brass CW617N
Thread: UNI EN ISO 228/1
Norm: DM 174 06/04/2004

Codice - *Code*	Ø	L cm	L1 mm	L2 mm	Conf. - *Pack*		€ Cad. - *€ each*
1187348	1/2"	10	13,5	50	10	80	
1187358	1/2"	15	13,5	75	10	60	
1187371	1/2"	20	13,5	100	10	40	
1187359	3/4"	10	14,0	50	10	40	
1187360	3/4"	15	14,0	75	10	40	
1187372	3/4"	20	14,0	100	10	20	
1187369	1"	10	15,5	50	10	20	
1187370	1"	15	15,5	75	10	20	
1187373	1"	20	15,5	100	5	15	

ART. 86

- R E -

Raccordo per pompa excelsior curvo

Excelsior pump bent pipe fitting



Material: Yellow brass CW617N
Thread: UNI EN ISO 228/1
Norm: DM 174 06/04/2004

Codice - *Code*	Ø	Conf. - *Pack*		€ Cad. - *€ each*
1180209	3/4"x20	10	80	
1180214	3/4"x25	5	50	
1180210	1"x25	5	50	
1180219	1"x30	5	30	
1180211	1"1/4x30	1	30	
1180212	1"1/2x40	1	15	
1180213	2"x50	1	8	

ART. 88

- R E -

Raccordo per pompa excelsior diritto

Excelsior pump straight pipe fitting



Material: Yellow brass CW617N
Thread: UNI EN ISO 228/1
Norm: DM 174 06/04/2004

Codice - *Code*	Ø	Conf. - *Pack*		€ Cad. - *€ each*
1180409	3/4"x20	10	100	
1180414	3/4"x25	10	60	
1180415	1"x25	10	60	
1180419	1"x30	1	45	
1180411	1"1/4x30	1	35	
1180412	1"1/2x40	1	20	
1180413	2"x50	1	15	

ART. 90

Raccordo porta gomma 3 pezzi sede conica

Conic seat 3 part hose connector



Material: Yellow brass CW617N
Thread: UNI EN 10226-1 (ex iso 7/1)
Norm: DM 174 06/04/2004

Codice - *Code*	Ø	Conf. - *Pack*		€ Cad. - *€ each*
0220720	20x20	5	15	
0220725	25x25	5	20	
0220730	30x30	5	10	

ART. 92

- R E -

Raccordo ottone per cassone diritto

Bowl straight brass pipe fitting

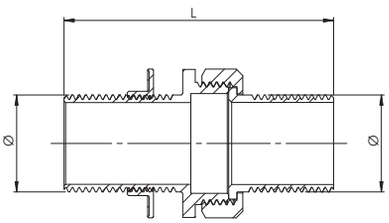



Material: Yellow brass CW617N
Thread: UNI EN ISO 228/1
Norm: DM 174 06/04/2004

Codice - *Code*	Ø	L mm	Conf. - *Pack*		€ Cad. - *€ each*
1182408	1/2"	72,0	25	260	
1182409	3/4"	75,6	15	195	
1182410	1"	92,5	10	130	
1182411	1"1/4	93,3	4	60	
1182412	1"1/2	93,3	3	45	
1182413	2"	112,0	1	30	

ART. 94

- R E -

Piletta per cassoni
Tank drains

Material: Yellow brass CW617N
Thread: UNI EN ISO 228/1
Norm: DM 174 06/04/2004

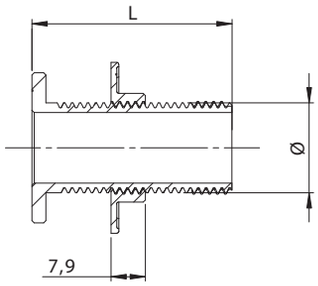



Codice - *Code*	Ø	Ø interno	L mm	Conf. - *Pack*		€ Cad. - *€ each*
1187708	1/2"	3/8"	47,8	10	120	
1187709	3/4"	1/2"	54,7	10	60	
1187710	1"	3/4"	92,5	5	50	
1187711	1"1/4	-	58,8	10	30	
1187712	1"1/2	-	52	10	20	

ART. 95

Piletta per cassone con tappo rosone codulo dado e 2 guarnizioni SBR spess. 3 mm
Smooth threaded drain provided with cap and shank
Material: Yellow brass CW617N



Codice - *Code*	Ø	Conf. - *Pack*		€ Cad. - *€ each*
0161060	1"	10	120	
0161061	1"1/4	10	100	

ART. 97

- R E -

Ghiera
Yellow brass reducer

Material: Yellow brass CW617N
Thread: UNI EN ISO 228/1
Norm: DM 174 06/04/2004



Codice - *Code*	Ø	Altezza mm	Conf. - *Pack*		€ Cad. - *€ each*
1187507	1/2"x3/8"	9,6	50	1600	
1187508	3/4"x1/2"	11,0	50	800	
1187510	1"x3/4"	11,6	10	500	

ART. 98

- R E -

Controdado piano
Yellow brass lock nut

Material: Yellow brass CW617N
Thread: UNI EN ISO 228/1
Norm: DM 174 06/04/2004

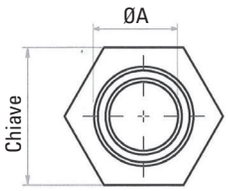



Codice - *Code*	Ø A	Spessore mm	Chiave mm	Conf. - *Pack*		€ Cad. - *€ each*
1168008	1/2"	4,5	25,0	50	1500	
1168009	3/4"	5,0	30,0	50	1200	
1168010	1"	6,0	37,0	10	500	

ART. 100

- R E -

Controdado flangiato
Yellow brass flanged back nut

Material: Yellow brass CW617N
Thread: UNI EN ISO 228/1
Norm: DM 174 06/04/2004

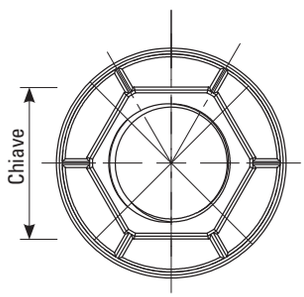



Codice - *Code*	Ø	Ø est	Chiave mm	Spessore totale mm	Conf. - *Pack*		€ Cad. - *€ each*
1186587	3/8"	30,0	20,0	7,5	50	1000	
1186588	1/2"	40,0	26,0	7,5	10	500	
1186589	3/4"	48,0	30,0	8	10	400	
1186590	1"	51,5	37,0	9	10	330	
1186591	1"1/4	60,0	45,0	9	10	200	
1186592	1"1/2	68,0	53,0	10,5	1	200	
1186593	2"	75,0	64,0	9	1	200	

ART. 102

- R E -

Raccordo 2 pezzi FF per pompa di circolazione con guarnizione
2 pieces straight FF pipe fitting for pumps

Material: Yellow brass CW617N
Thread: UNI EN ISO 228/1
Norm: DM 174 06/04/2004



Codice - *Code*	Ø tubo	Ø filettatura pompa	Conf. - *Pack*		€ Cad. - *€ each*
6086010	3/4"	1"1/4	10	90	
6086012	1"	1"1/2	10	80	
6086015	1"1/4	2"	1	50	

ART. 104

- R E -

Raccordo a 5 vie 1"
5 ways pipe fitting

Material: Yellow brass CW617N
Thread: UNI EN ISO 228/1
Norm: DM 174 06/04/2004

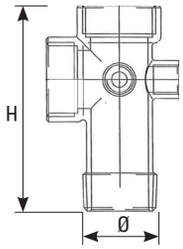



Codice - *Code*	Ø	H mm	Conf. - *Pack*		€ Cad. - *€ each*
2262010	1"	72	5	50	
2262050	1"	92	5	40	

ART. 106

- R E -

Raccordo per contatore d'acqua
Water meter pipe fitting

Material: Yellow brass CW617N
Thread: UNI EN ISO 228/1
Norm: DM 174 06/04/2004

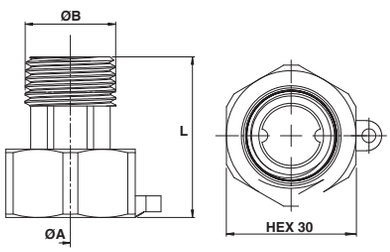



Codice - *Code*	Ø A x B	L mm	Conf. - *Pack*		€ Cad. - *€ each*
0283602	3/4"x1/2"	37,2	10	200	
0283604	1"x3/4"	57	10	120	

ART. 108

Codolo e calotta girevole con sede piana

Material: Yellow brass CW617N
Thread: UNI EN 10226-1 (ex iso 7/1)
Norm: DM 174 06/04/2004



Codice - *Code*	Ø	Lunghezza totale mm	Conf. - *Pack*		€ Cad. - *€ each*
6086058	1/2"Fx1/2"M	55	10	100	
6086059	3/4"Fx3/4"M	60	10	60	

ART. 110

- R E -

Presa rapida in ottone
Brass clamp

Material: Yellow brass CW617N
Thread: UNI EN 10226-1 (ex iso 7/1)
Norm: DM 174 06/04/2004



Codice - *Code*	Ø	Conf. - *Pack*		€ Cad. - *€ each*
1202008	1/2"x1/2"	10	120	
1202009	3/4"x1/2"	10	90	
1202010	1"x3/4"	10	80	
1202011	1"1/4x3/4"	10	60	
1202012	1"1/2x3/4"	10	80	

RACCORDI PER TUBO PE/FE | PE/FE fittings



Raccordi tubo pe ghiera ottone ▶ **36-38**
Fittings for pe pipe with brass ring



Raccordi tubo pe ghiera pvc ▶ **39-41**
Fittings for pe pipe with pvc ring



Raccordi tubo ferro ▶ **42**
Fittings for steel pipe

ISTRUZIONI DI MONTAGGIO
RACCORDI PER TUBO POLIETILENE CON ANELLO IN RESINA POLIACETALICA
ASSEMBLY INSTRUCTIONS - ***FITTINGS FOR PE PIPE WITH RESIN RING***



Tubo in polietilene (alta, media o bassa densità).
Polyethylene pipe (HD, BD, LD).



1. Corpo del giunto **2.** Guarnizione in gomma
3. Anello di ancoraggio antisfilamento **4.** Girello si serraggio
1. *Joint casing* ***2.*** *Rubber gasket*
3. *Plastic ring for mechanical fastening* ***4.*** *Nut*



Inserire nell'ordine sul tubo: il girello (4) l'anello (3) e la guarnizione in gomma (2).
Fit on the pipe in the following order: nut (4), ring (3) and rubber gasket.



Alloggiare il tubo all'interno del corpo del giunto e appoggiare la guarnizione (2) all'interno della svasatura tronco conica, portare l'anello (3) in contatto con la guarnizione (2).
House the pipe inside the joint casing, put the gasket (2) inside the cone-shaped flare, bring the ring (3) in touch with gasket (2).



Avvitare il girello (4) a mano, quindi fissarlo con la chiave.
Hand tight the nut (4) and then torque it with a wrench.

ART. 150

- R E -

Raccordo per tubo polietilene M con ghiera in ottone

Brass male straight fitting for PE pipe with brass cap

Material: Yellow brass CW617N with O-Ring EPDM
Max working pressure: PN10
Working temperature: da -20°C a +120°C
Thread: UNI EN 10226-1 (ex iso 7/1)
Norm: DM 174 06/04/2004

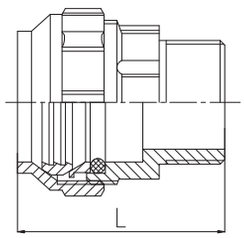

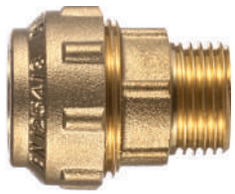

Codice - *Code*	Ø	DN	L mm	Conf. - *Pack*		€ Cad. - *€ each*
1200108	1/2"	20	42	10	180	
1200109	3/4"	25	47	10	120	
1200110	1"	32	56	5	70	
1200111	1"1/4	40	64	5	40	
1200112	1"1/2	50	67	2	30	
1200113	2"	63	74	2	16	

ART. 152

- R E -

Raccordo per tubo polietilene F con ghiera in ottone

Brass Female Straight fitting for PE pipe with brass cap

Material: Yellow brass CW617N with O-Ring EPDM
Max working pressure: PN10
Working temperature: da -20°C a +120°C
Thread: UNI EN 10226-1 (ex iso 7/1)
Norm: DM 174 06/04/2004

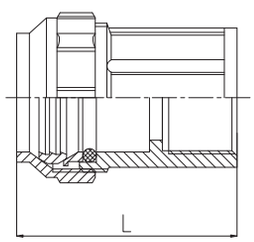



Codice - *Code*	Ø	DN	L mm	Conf. - *Pack*		€ Cad. - *€ each*
1200408	1/2"	20	37	10	200	
1200409	3/4"	25	43	10	120	
1200410	1"	32	52	5	60	
1200412	1"1/4	40	59	10	50	
1200414	1"1/2	50	64	5	30	
1200413	2"	63	71	5	15	

ART. 154

- R E -

Manicotto per tubo polietilene con ghiera in ottone

Brass Straight fitting for PE pipe with brass cap

Material: Yellow brass CW617N with O-Ring EPDM
Max working pressure: PN10
Working temperature: da -20°C a +120°C
Thread: UNI EN 10226-1 (ex iso 7/1)
Norm: DM 174 06/04/2004

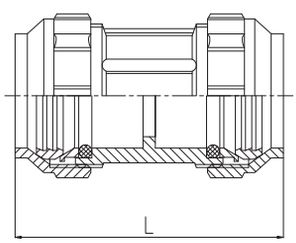



Codice - *Code*	Ø	L mm	Conf. - *Pack*		€ Cad. - *€ each*
1200608	20x20	53	10	120	
1200609	25x25	63	5	70	
1200610	32x32	70	10	50	
1200611	40x40	77	10	30	
1200612	50x50	97	5	15	
1200613	63x63	107	5	10	

ART. 156

- R E -

Raccordo a tee con derivazione F per tubo polietilene con ghiera in ottone

Brass female TEE fitting for PE pipe with brass cap

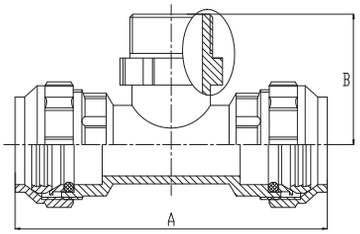



Material: Yellow brass CW617N with O-Ring EPDM
Max working pressure: PN10
Working temperature: da -20°C a +120°C
Thread: UNI EN 10226-1 (ex iso 7/1)
Norm: DM 174 06/04/2004

Codice - *Code*	Ø	DN	A mm	B mm	Conf. - *Pack*		€ Cad. - *€ each*
1201008	1/2"	20	78	34	10	70	
1201009	3/4"	25	87	37	10	50	
1201010	1"	32	103	41	3	30	
1201011	1"1/4	40	121	46	5	15	
1201012	1"1/2	50	145	50,5	5	10	
1201013	2"	63	165,5	64	1	6	

ART. 158

- R E -

Tee per tubo polietilene con ghiera in ottone

Brass TEE fitting for PE pipe with brass cap

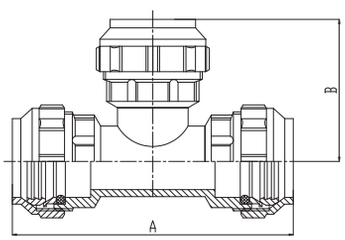



Material: Yellow brass CW617N with O-Ring EPDM
Max working pressure: PN10
Working temperature: da -20°C a +120°C
Thread: UNI EN 10226-1 (ex iso 7/1)
Norm: DM 174 06/04/2004

Codice - *Code*	Ø	A mm	B mm	Conf. - *Pack*		€ Cad. - *€ each*
1201208	20x20x20	78	40	10	70	
1201209	25x25x25	87	43,5	5	40	
1201210	32x32x32	103	53	5	20	
1201211	40x40x40	121	62	2	10	
1201212	50x50x50	145	74,5	1	8	
1201213	63x63x63	165,5	87	1	5	

ART. 160

- R E -

Gomito per tubo polietilene con ghiera in ottone

Brass elbow fitting for PE pipe with brass cap

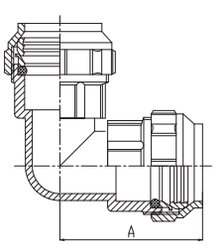



Material: Yellow brass CW617N with O-Ring EPDM
Max working pressure: PN10
Working temperature: da -20°C a +120°C
Thread: UNI EN 10226-1 (ex iso 7/1)
Norm: DM 174 06/04/2004

Codice - *Code*	Ø	A mm	Conf. - *Pack*		€ Cad. - *€ each*
1201408	20x20	40	10	120	
1201409	25x25	45,5	10	60	
1201410	32x32	52,5	4	40	
1201411	40x40	61,5	2	20	
1201412	50x50	71	2	10	
1201413	63x63	89	1	5	

ART. 162

- R E -

Gomito F per tubo polietilene con ghiera in ottone

Brass female elbow fitting for PE pipe with brass cap

Material: Yellow brass CW617N with O-Ring EPDM
Max working pressure: PN10
Working temperature: da -20°C a +120°C
Thread: UNI EN 10226-1 (ex iso 7/1)
Norm: DM 174 06/04/2004

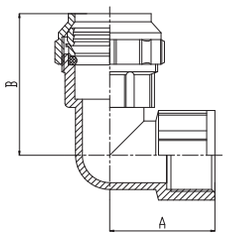



Codice - *Code*	Ø	A mm	B mm	Conf. - *Pack*		€ Cad. - *€ each*
1201808	20x1/2"	32	40	10	150	
1201809	25x3/4"	35	45,5	5	80	
1201810	32x1"	39	52,5	5	50	
1201811	40x1"1/4	43	60,5	2	30	
1201812	50x1"1/2	53	71,5	5	15	
1201813	63x2"	62	83	2	10	

ART. 164

- R E -

Gomito M per tubo polietilene con ghiera in ottone

Brass male eblow fitting for PE pipe with brass cap

Material: Yellow brass CW617N with O-Ring EPDM
Max working pressure: PN10
Working temperature: da -20°C a +120°C
Thread: UNI EN 10226-1 (ex iso 7/1)
Norm: DM 174 06/04/2004

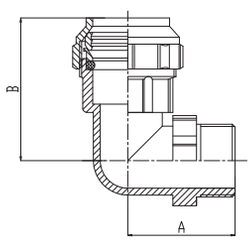



Codice - *Code*	Ø	A mm	B mm	Conf. - *Pack*		€ Cad. - *€ each*
1201608	20x1/2"	34	40	10	100	
1201609	25x3/4"	37	45,5	10	70	
1201610	32x1"	41,5	52,5	10	50	
1201611	40x1"1/4	46,5	60,5	5	30	
1201612	50x1"1/2	55	71,5	5	15	
1201613	63x2"	68	83	2	10	

ART. 180

- R E -

Raccordo M per tubo polietilene
M brass polyethylene pipe fittings

Material: Yellow brass CW617N
Thread: UNI EN ISO 228/1
Norm: DM 174 06/04/2004

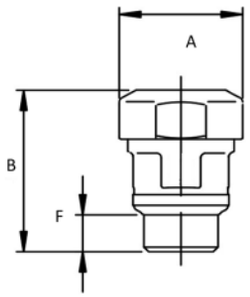



C/ANELLO IN PVC

Codice - *Code*	Ø	DN	A mm	B mm	F mm	Conf. - *Pack*		€ Cad. - *€ each*
1200220	1/2"	20	34	47	13	10	120	
1200225	3/4"	25	43	58,5	16	10	70	
1200232	1"	32	51	63,5	16,5	10	45	
1200240	1"1/4	40	59	75	19,5	5	30	
1200250	1"1/2	50	71	75	18	5	20	
1200263	2"	63	87	90,5	17	2	8	

ART. 182

- R E -

Raccordo F per tubo polietilene
F brass polyethylene pipe fittings

Material: Yellow brass CW617N
Thread: UNI EN ISO 228/1
Norm: DM 174 06/04/2004

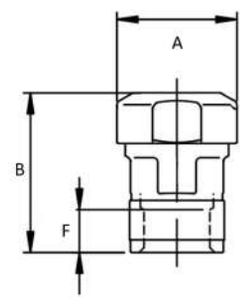



C/ANELLO IN PVC

Codice - *Code*	Ø	DN	A mm	B mm	F mm	Conf. - *Pack*		€ Cad. - *€ each*
1200420	1/2"	20	34	45	12	10	120	
1200425	3/4"	25	43	51	11,5	10	60	
1200432	1"	32	51	60,5	14,5	10	45	
1200440	1"1/4	40	59	66,5	17,5	5	30	
1200450	1"1/2	50	71	71,5	19,5	5	20	
1200463	2"	63	87	84,5	23	2	10	

ART. 184

- R E -

Manicotto F.F. per tubo polietilene
Brass FF polyethylene coupling

Material: Yellow brass CW617N
Thread: UNI EN ISO 228/1
Norm: DM 174 06/04/2004

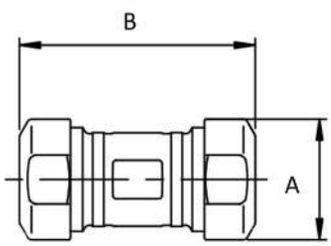



C/ANELLO IN PVC

Codice - *Code*	DN	A mm	B mm	Conf. - *Pack*		€ Cad. - *€ each*
1200620	20x20	34	65,5	10	70	
1200625	25x25	43	79,5	10	40	
1200632	32x32	51	97,5	10	30	
1200640	40x40	59	107,5	5	20	
1200650	50x50	71	106	5	10	
1200663	63x63	87	130	2	8	

ART. 186

- R E -

Raccordo a TEE c/derivazione F per tubo polietilene

Brass TEE polyethylene pipe fittings

Material: Yellow brass CW617N
Thread: UNI EN 10226-1 (ex iso 7/1)
Norm: DM 174 06/04/2004

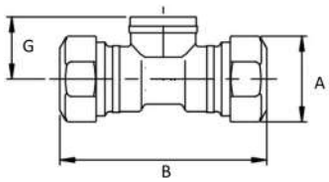



C/ANELLO IN PVC

Codice - *Code*	Ø	DN	A mm	B mm	G mm	Conf. - *Pack*		€ Cad. - *€ each*
1201020	1/2"	20	34	82	22	10	70	
1201025	3/4"	25	43	90,5	27	10	30	
1201032	1"	32	51	106,5	34	10	25	
1201040	1"1/4	40	59	136	38,5	5	18	
1201050	1"1/2	50	71	146	44	5	10	
1201063	2"	63	87	193,5	62,5	2	5	

ART. 188

- R E -

Raccordo a TEE per tubo polietilene

Brass TEE polyethylene pipe fittings

Material: Yellow brass CW617N
Thread: UNI EN 10226-1 (ex iso 7/1)
Norm: DM 174 06/04/2004

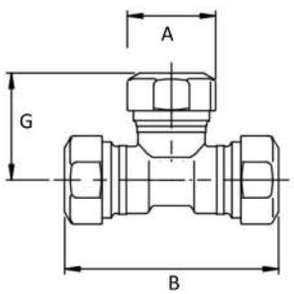



C/ANELLO IN PVC

Codice - *Code*	Ø	A mm	B mm	G mm	Conf. - *Pack*		€ Cad. - *€ each*
1201220	20x20x20	34	83	41,5	10	50	
1201225	25x25x25	43	98,5	50,5	10	25	
1201232	32x32x32	51	118	52,5	10	20	
1201240	40x40x40	59	141	70,5	5	15	
1201250	50x50x50	71	147	73,5	5	10	
1201263	63x63x63	87	193,5	97	2	4	

ART. 190

- R E -

Gomito per tubo polietilene

Brass polyethylene elbow joint

Material: Yellow brass CW617N
Thread: UNI EN 10226-1 (ex iso 7/1)
Norm: DM 174 06/04/2004

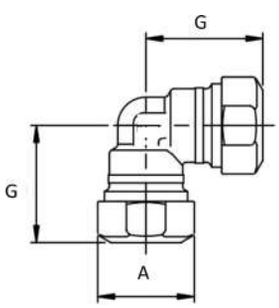



C/ANELLO IN PVC

Codice - *Code*	Ø	A mm	G mm	Conf. - *Pack*		€ Cad. - *€ each*
1201420	20x20	34	42	10	100	
1201425	25x25	43	49	10	40	
1201432	32x32	51	61	10	25	
1201440	40x40	59	71	5	15	
1201450	50x50	71	80,5	5	10	
1201463	63x63	87	95,5	2	5	

ART. 192

- R E -

Gomito F per tubo polietilene

Brass FF polyethylene elbow joint

Material: Yellow brass CW617N
Thread: UNI EN 10226-1 (ex iso 7/1)
Norm: DM 174 06/04/2004

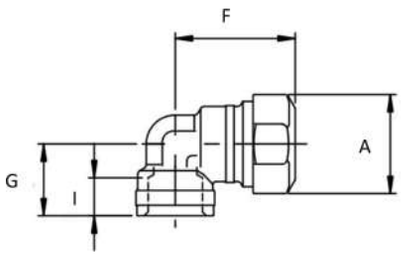



C/ANELLO IN PVC

Codice - *Code*	Ø	A mm	F mm	G mm	I mm	Conf. - *Pack*		€ Cad. - *€ each*
1201820	20x1/2"	34	40,5	29,5	12	10	130	
1201825	25x3/4"	43	50	36,5	11	10	70	
1201832	32x1"	51	52	42,5	13	10	40	
1201840	40x1"1/4	59	72	57,5	16	5	15	
1201850	50x1"1/2	71	80,5	63	20	5	10	
1201863	63x2"	87	95,5	71	24	2	6	

ART. 194

- R E -

Gomito M per tubo polietilene

Brass MF polyethylene elbow joint

Material: Yellow brass CW617N
Thread: UNI EN 10226-1 (ex iso 7/1)
Norm: DM 174 06/04/2004

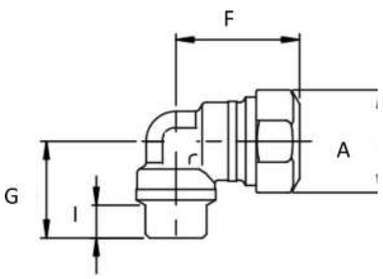



C/ANELLO IN PVC

Codice - *Code*	Ø	A mm	F mm	G mm	I mm	Conf. - *Pack*		€ Cad. - *€ each*
1201620	20x1/2"	34	40,5	29,5	11	10	130	
1201625	25x3/4"	43	50	36,5	13	10	70	
1201632	32x1"	51	52	42,5	13,5	10	40	
1201640	40x1"1/4	59	72	57,5	16,5	5	15	
1201650	50x1"1/2	71	80,5	63	24,5	5	10	
1201663	63x2"	87	95,5	71	23	2	6	

ART. 196

- R E -

Boccole di rinforzo in ottone per tubo gas polietilene S5

S 5 gas tube brass reinforcing bushes

Material: Yellow brass CW617N
Thread: UNI EN 10226-1 (ex iso 7/1)
Norm: DM 174 06/04/2004

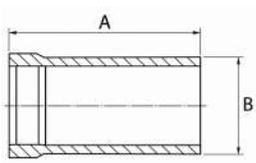



Codice - *Code*	Ø	A mm	B mm	DN	Conf. - *Pack*		€ Cad. - *€ each*
1202220	1/2"	31	14,2	20	10	10	
1202225	3/4"	37	19,2	25	10	10	
1202232	1"	42	26,2	32	10	10	
1202240	1"1/4	47	32,8	40	10	10	
1202250	1"1/2	53	41	50	10	10	
1202263	2"	61	51,6	63	10	10	

ART. 220

- R E -

Raccordo per tubo ferro M tenuta metallica
Guarnizione in EPDM

M brass pipe fitting

Material: Yellow brass CW617N
Thread: UNI EN ISO 228/1
Norm: DM 174 06/04/2004

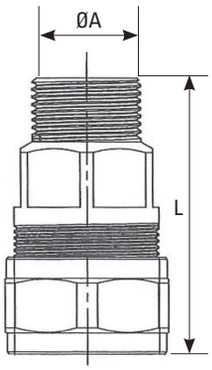



Codice - *Code*	ØA	L mm	Conf. - *Pack*		€ Cad. - *€ each*
1191007	3/8"	68	10	120	
1191008	1/2"	63,3	10	90	
1191009	3/4"	65,6	5	80	
1191010	1"	72,5	5	50	
1191011	1"1/4	79,6	5	30	
1191012	1"1/2	87	5	25	
1191013	2"	97,9	2	12	

ART. 222

- R E -

Raccordo per tubo ferro F tenuta metallica
Guarnizione in EPDM

F brass pipe fitting

Material: Yellow brass CW617N
Thread: UNI EN ISO 228/1
Norm: DM 174 06/04/2004

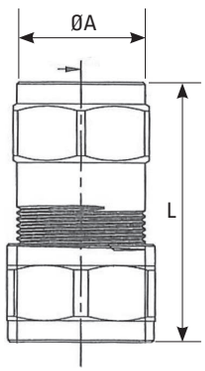



Codice - *Code*	ØA	L mm	Conf. - *Pack*		€ Cad. - *€ each*
1190807	3/8"	67,0	10	90	
1190808	1/2"	60,2	10	60	
1190809	3/4"	63,7	5	60	
1190810	1"	67,3	5	40	
1190811	1"1/4	72	5	30	
1190812	1"1/2	80	5	20	
1190813	2"	87,4	2	12	

ART. 224

- R E -

Raccordo doppio per tubo ferro tenuta metallica.
Guarnizione in EPDM

Double brass pipe fitting

Material: Yellow brass CW617N
Thread: UNI EN ISO 228/1
Norm: DM 174 06/04/2004

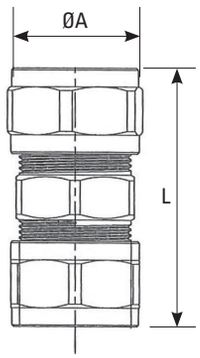



Codice - *Code*	ØA	L mm	Conf. - *Pack*		€ Cad. - *€ each*
1190607	3/8"	72,0	10	60	
1190608	1/2"	68,8	10	60	
1190609	3/4"	74,2	10	40	
1190610	1"	76,2	10	20	
1190611	1"1/4	86,0	1	25	
1190612	1"1/2	96,9	1	18	
1190613	2"	99,6	1	10	

RACCORDI IN OTTONE CROMATO
Chromed brass fittings


Gomiti 90° Elbows 90° ▶ 44


Tee Tees ▶ 44


Manicotti Sockets ▶ 44


Nipples Hex nipples ▶ 44


Tappi Caps ▶ 44


Riduzioni Reducers ▶ 45


Prolunghe Extensions ▶ 45

ART. 240 - R E -

Gomito a 90° F.F. in ottone cromato
FF Chromium-plated brass elbow joint

Codice *Code*	Ø	Conf. - *Pack*	€ Cad. *€ each*
1185007	3/8"	10 200	
1185008	1/2"	10 140	
1185009	3/4"	10 80	
1185010	1"	1 70	


Fig. 90

ART. 242 - R E -

Gomito a 90° M.F. in ottone cromato
Chromium-plated brass MF elbow joint

Codice *Code*	Ø	Conf. - *Pack*	€ Cad. *€ each*
1185207	3/8"	10 300	
1185208	1/2"	10 170	
1185209	3/4"	5 100	
1185210	1"	1 50	


Fig. 92

ART. 244 - R E -

Tee in ottone cromato
Chromium-plated brass tee

Codice *Code*	Ø	Conf. - *Pack*	€ Cad. *€ each*
1185407	3/8"	10 160	
1185408	1/2"	5 120	
1185409	3/4"	10 70	
1185410	1"	1 50	


Fig. 130

ART. 246 - R E -

Manicotto in ottone cromato
Chromium-plated brass coupling

Codice *Code*	Ø	Conf. - *Pack*	€ Cad. *€ each*
1185607	3/8"	10 400	
1185608	1/2"	10 240	
1185609	3/4"	10 150	
1185610	1"	10 100	


Fig. 270

ART. 248 - R E -

Tappo in ottone cromato M
M chromium-plated brass cap

Codice *Code*	Ø	Conf. - *Pack*	€ Cad. *€ each*
1185707	3/8"	10 500	
1185708	1/2"	10 600	
1185709	3/4"	10 350	
1185710	1"	10 200	


Fig. 290

ART. 250 - R E -

Tappo in ottone cromato F
F chromium-plated brass cap

Codice *Code*	Ø	Conf. - *Pack*	€ Cad. *€ each*
1186507	3/8"	10 500	
1186508	1/2"	10 600	
1186509	3/4"	10 400	
1186510	1"	10 200	


Fig. 300

ART. 252 - R E -

Nipples in ottone cromato
Chromium-plated brass nipples

Codice *Code*	Ø	Conf. - *Pack*	€ Cad. *€ each*
1185806	1/4"	10 1000	
1185807	3/8"	10 600	
1185808	1/2"	10 350	
1185809	3/4"	10 250	
1185810	1"	10 200	


Fig. 280

ART. 254 - R E -

Nipples di riduzione in ottone cromato
Reduced chromium-plated brass nipples

Codice *Code*	Ø	Conf. - *Pack*		€ Cad. *€ each*
1186007	3/8"x1/4"	10	600	
1186008	1/2"x3/8"	10	350	
1186009	3/4"x1/2"	10	200	
1186010	1"x3/4"	10	200	



Fig. 245

ART. 256 - R E -

Riduzione MF in ottone cromato
MF chromium-plated brass reducer

Codice *Code*	Ø	Conf. - *Pack*		€ Cad. *€ each*
1186407	3/8"x1/4"	10	1100	
1186408	1/2"x3/8"	10	600	
1186409	3/4"x1/2"	10	350	
1186406	1"x1/2"	10	200	
1186410	1"x3/4"	10	200	



Fig. 241

ART. 258 - R E -

Prolunga ridotta FM in ottone cromato
FM chromium-plated brass extension

Codice *Code*	Ø	Conf. - *Pack*		€ Cad. *€ each*
0168207	1/2"x3/8"	10	500	
0168208	3/4"x1/2"	10	320	
0168209	1"x3/4"	10	150	



Fig. 246

ART. 260 - R E -

Prolunga in ottone cromato
Chromium-plated brass extension

Codice *Code*	Ø	Conf. - *Pack*		€ Cad. *€ each*
1187018	cm.1x1/2"	10	450	
1187020	cm.1,5x1/2"	10	350	
1187028	cm.2x1/2"	10	280	
1187038	cm.3x1/2"	10	200	
1187048	cm.4x1/2"	10	200	
1187058	cm.5x1/2"	10	150	
1187068	cm.6x1/2"	10	100	
1187088	cm.8x1/2"	10	100	
1187098	cm.10x1/2"	10	100	
1187039	cm.3x3/4"	10	150	
1187049	cm.4x3/4"	10	120	



ART. 262 - R E -

Prolunga in ottone cromato pesante
Heavy chromium-plated brass extensions

Codice *Code*	Ø	Conf. - *Pack*		€ Cad. *€ each*
1187060	cm.1x1/2"	10	450	
1187062	cm.2x1/2"	10	280	
1187063	cm.3x1/2"	10	200	
1187064	cm.4x1/2"	10	140	
1187065	cm.5x1/2"	10	150	



PESANTE/HEAVY

ART. 264 - R E -

Riduzione ottone cromato
MF chromium-plated brass reducer

Codice *Code*	Ø	Conf. - *Pack*		€ Cad. *€ each*
0168111	M1"XF1"1/4	10	160	
0168112	M1"1/4XF1"1/2	10	150	



VALVOLE IN OTTONE | brass valves

INTRODUZIONE

G.T.COMIS è in grado di offrire alla propria Clientela una gamma completa di valvole in ottone.
La gamma si compone di valvole a sfera, valvole di ritegno, valvole di fondo e clapet, filtri a Y e saracinesche.

FILETTATURE

Le valvole G.T.COMIS immesse sul mercato con il nostro marchio RACCORDERIE EMILIANE, possono essere realizzate con accoppiamento secondo UNI EN 10226-1 o secondo UNI EN ISO 228-1. Tutte le filettature sono sbavate.

• FILETTATURA UNI EN ISO 228-1 per le valvole a sfera

Nella filettatura conforme alla norma ISO 228-1 l'accoppiamento non è a tenuta sul filetto ed entrambe le filettature sono cilindriche.

• FILETTATURA UNI EN 10226-1 (ex ISO 7) per valvole per gas

Nella filettatura conforme alla norma UNI EN 10226-1 (ex ISO 7) l'accoppiamento è a tenuta sul filetto. La filettatura è del tipo conico per l'esterno (maschio) e cilindrica per quella interna (femmina) ed è quindi perfettamente idonea alla realizzazione di impianti di distribuzione di gas combustibili secondo quanto disposto dalle norme EN 1775 ed UNI 7129.
Nel caso di accoppiamento con tubi in acciaio, si raccomanda l'utilizzo di sigillanti liquidi anaerobici o nastro di politetrafluoruro di etilene o altri idonei materiali in alternativa alla canapa, evitando coppie di serraggio troppo elevate che potrebbero portare, avendo il raccordo un filetto conico, alla rottura dello stesso.
Le giunzioni con tubi di rame possono essere realizzate mediante giunzione meccanica, tenendo presente che giunzioni e raccordi meccanici non devono essere impiegati nelle tubazioni sotto traccia ed in quelle interrate. I raccordi con cui si esegue l'accoppiamento possono essere di rame, di ottone o di bronzo (secondo UNI EN ISO 4063 ed UNI EN 1254-1).

PRESSIONE E TEMPERATURA MASSIMA DI ESERCIZIO

Le pressioni massime di esercizio, cosicché le temperature, sono indicate nei singoli articoli.

MATERIALE

La lega di ottone utilizzata per i raccordi è conforme al DM 174 del 06/04/2004 e pertanto sono idonei all'utilizzo negli impianti fissi di captazione, trattamento, adduzione e distribuzione delle acque destinate al consumo umano. I componenti sono:

INTRODUCTION

G.T.COMIS offers to its customers a complete range of brass valves. The range consists of ball valves, check valves, foot valves and clapet valves, Y filters and gate valves.

THREADS

GT COMIS valves placed on the market under our RACCORDERIE EMILIANE brand can be made with couplings according to UNI EN 10226-1 or according to UNI EN ISO 228-1. All threads are deburred.

• UNI EN ISO 228-1 THREAD for ball valves

In threading compliant with ISO 228-1 the coupling is not sealed on the thread and both threads are cylindrical.

• UNI EN 10226-1 THREAD (formerly ISO 7) for gas applications

In threads compliant with UNI EN 10226-1 (ex ISO 7) the coupling is sealed on the thread. The thread is of the conical type for the external one (male) and cylindrical for the internal one (female) and is therefore perfectly suitable for the construction of combustible gas distribution systems in accordance with the provisions of the EN 1775 and UNI 7129 standards.
In the case of coupling with steel pipes, it is recommended to use anaerobic liquid sealants or ethylene polytetrafluoride tape or other suitable materials as an alternative to hemp, avoiding excessively high tightening torques which could lead, given the connection has a conical thread, upon its breakage.
Joints with copper pipes can be made using mechanical jointing, keeping in mind that mechanical joints and fittings must not be used in underground and underground pipes. The fittings with which the coupling is carried out can be made of copper, brass or bronze (according to UNI EN ISO 4063 and UNI EN 1254-1).

MAXIMUM WORKING PRESSURE

The maximum operating pressures, as well as temperatures, are indicated in the each of the following items.

MATERIAL

the brass alloy used for the fittings complies with Ministerial Decree 174 of 06/04/2004 and is therefore suitable for use in fixed systems for the collection, treatment, supply and distribution of water intended for human consumption. The components are:

			IMPUREZZE/IMPURITIES		
Cu	**Pb**	**Zn**	**Arsenico (As) + Antimonio (Sb)**	**Cadmio (Cd)**	**Nichel**
55-64%	≤ 3.5%	il resto	≤ 0.15%	≤ 0.01%	≤ 0.3%



OTTONE GIALLO | yellow brass

VALVOLE A SFERA | Brass ball valves


Valvole a sfera F/F 48
F/F ball valves


Valvole a sfera F/F serie pesante 49
F/F ball valves heavy type


Valvole a sfera M/F 50
M/F ball valves


Valvole a sfera M/F serie pesante 51
M/F ball valves heavy type

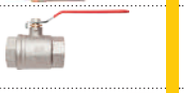
Valvole a sfera F/F maniglia piatta 52
F/F ball valves flat handle

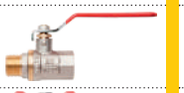
Valvole a sfera M/F maniglia piatta 53
M/F ball valves flat handle


Valvole a sfera F/F maniglia farfalla 54
F/F ball valves butterfly handle


Valvole a sfera F/F maniglia farfalla serie pesante NEW 55
F/F ball valves butterfly handle


Valvole a sfera M/F maniglia farfalla 56
M/F ball valves butterfly handle


Valvole a sfera M/F maniglia farfalla serie pesante NEW 57
M/Fball valves butterfly handle


Valvole a sfera con bocchettone 58
M/F ball valves with union


Valvole a sfera a squadro 59
Angle ball valves with union


Miniball 59
Mini ball valves


Valvole a sfera per gas NEW 60-63
Gas ball valves


Accessori per valvole standard NEW 64
Ball valve accessories


Valvole di ritegno 66
Universal check valve


Filtri per valvole ritegno 66
Europa valve filters


Valvole di fondo 67
Foot valves


Filtri a y 68
Y filters


Valvole clapet tenuta metallica/nbr 68
Metal/nbr clapet valves


Saracinesche 69
Gate valves


Valvole antisabbia 69
Anti-sand valves


Rubinetto con portagomma NEW 70-71
Hose bibcok ball valve

ART. 300 - R E -

Valvola a sfera F.F. con leva

F.F. ball valve, with handle, body nickeled brass

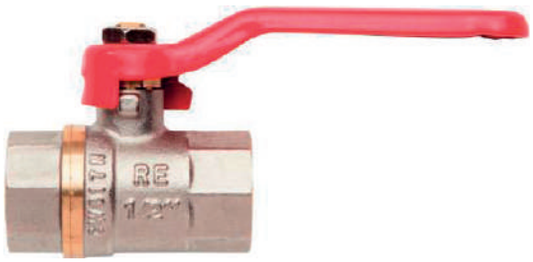

Material: Lever handle in steel,
body in nickel plated brass CW617N, P.T.F.E. gasket
Thread: UNI ISO 228-1
Norm: DM 174 06/04/2004

Codice - *Code*	Ø	A mm	B mm	C mm	D mm	E mm	F mm	Pressure kg/cm²	Conf. - *Pack*		€ Cad. - *€ each*
1100027	3/8"	46,0	10,0	9,9	21,6	86,5	40,0	30 bar	15	135	
1100028	1/2"	53,0	12,5	14,0	24,5	84,0	41,0	30 bar	10	90	
1100029	3/4"	60,0	13,0	19,0	29,5	84,0	44,5	30 bar	15	60	
1100030	1"	65,5	13,0	22,5	36,0	104,5	57,0	30 bar	10	40	
1100031	1"1/4	76,5	14,5	30,0	46,0	120,0	63,0	20 bar	5	20	
1100032	1"1/2	84,5	15,5	35,0	52,5	162,0	72,5	20 bar	4	16	
1100033	2"	100,0	16,5	45,5	65,0	168,0	86,0	20 bar	2	8	
1100034	2"1/2	124,5	20,0	59,0	82,5	220,0	105,0	16 bar	1	6	
1100035	3"	154,0	22,0	73,0	100,0	255,0	130,0	16 bar	1	4	
1100037	4"	177,0	24,0	95,0	126,0	255,0	144,0	16 bar	1	2	

Working temperature min/max: -20°C +150°C

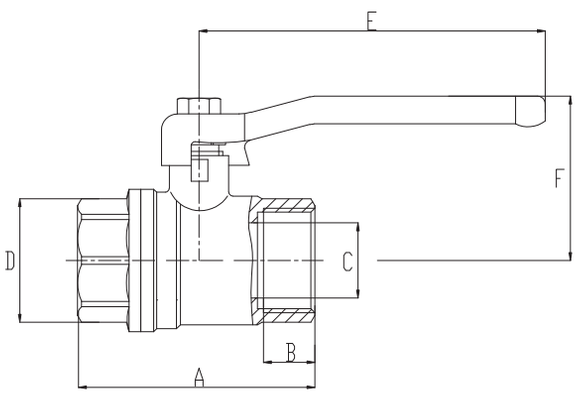

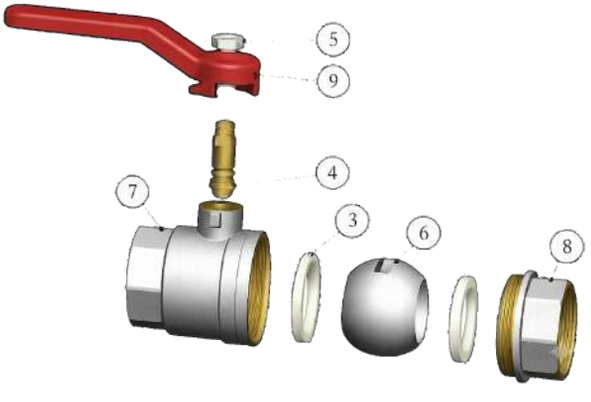

	N° *POS*	DESCRIZIONE *DESCRIPTION*	Q.tà *Q.ty*	MATERIALE *MATERIAL*	
TENUTA	3	SEAT	2	P.T.F.E.	P.T.F.E.
ASTA DI MANOVRA	4	STEM	1	CW617N	OTTONE
DADO	5	NUT	1	ACCIAIO NICHEL.	ACCIAIO NICHEL.
SFERA	6	BALL	1	CW617N	OTTONE
CORPO	7	BODY	1	CW617N	OTTONE
MANIGLIA	8	BONNET	1	CW617N	OTTONE
MANIGLIA	9	HANDLE	1	FE	ACCIAIO

ART. 300A

- R E -



Valvola a sfera F.F. con leva SERIE PESANTE

F.F. ball valve, with handle, body nickeled brass - HEAVY TYPE

Material: Lever handle in steel,
body in nickel plated brass CW617N, P.T.F.E. gasket
Thread: UNI ISO 228-1
Norm: DM 174 06/04/2004

Codice - *Code*	Ø	A mm	B mm	C mm	E mm	F mm	Pressure kg/cm²	Conf. - *Pack*		€ Cad. - *€ each*
1100048	1/2"	48	10,5	15	87	43	50 bar	10	90	
1100049	3/4"	55	10,5	20	87	47	40 bar	15	60	
1100050	1"	67	13,0	25	104	57	40 bar	10	40	
1100051	1"1/4	78,5	15,0	32	120	69	30 bar	5	20	
1100052	1"1/2	94,5	17	40	120	75	30 bar	4	16	
1100053	2"	105,5	18	50	150	91	25 bar	2	8	
1100054	2"1/2	132	21	65	246	128	18 bar	1	4	
1100055	3"	152	23	80	246	139	16 bar	1	4	

Working temperature min/max: -20°C +150°C

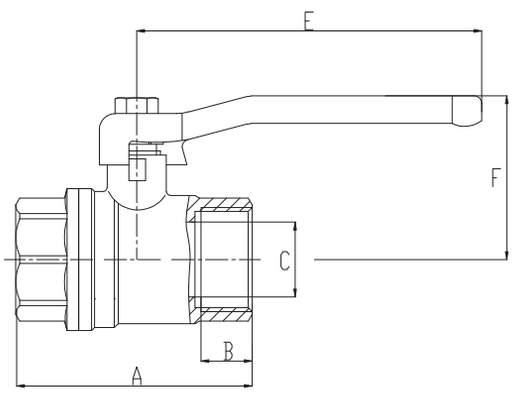

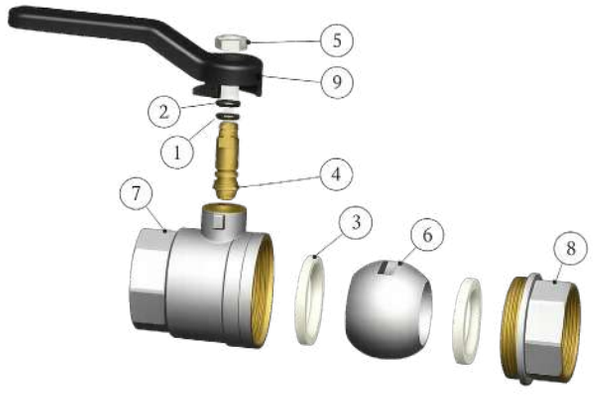

	N° *POS*	DESCRIZIONE *DESCRIPTION*	Q.tà *Q.ty*	MATERIALE *MATERIAL*	
O-RING	1	O-RING	1	EPDM	EPDM
O-RING	2	O-RING	1	FKM	FKM
TENUTA	3	SEAT	2	P.T.F.E.	P.T.F.E.
ASTA DI MANOVRA	4	STEM	1	CW617N	OTTONE
DADO	5	NUT	1	ACCIAIO NICHEL.	ACCIAIO NICHEL.
SFERA	6	BALL	1	CW617N	OTTONE
CORPO	7	BODY	1	CW617N	OTTONE
MANIGLIA	8	BONNET	1	CW617N	OTTONE
MANIGLIA	9	HANDLE	1	FE	ACCIAIO.

ART. 302 - R E -

Valvola a sfera M.F. con leva

M.F. ball valve, with handle, body nickeled brass

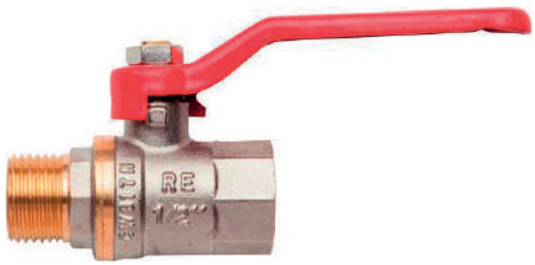

Material: Lever handle in steel,
body in nickel plated brass CW617N, P.T.F.E. gasket
Thread: UNI ISO 228-1
Norm: DM 174 06/04/2004

Codice - *Code*	Ø	A mm	B mm	C mm	D mm	E mm	F mm	Pressure kg/cm2	Conf. - *Pack*		€ Cad. - *€ each*
1100227	3/8"	54,0	10,5	9,9	17,5	86,5	40,0	30 bar	15	135	
1100228	1/2"	61,0	12,5	14,0	22,0	84,0	41,0	30 bar	10	90	
1100229	3/4"	67,5	13,0	19,0	27,5	84,0	44,5	30 bar	15	60	
1100230	1"	74,5	13,0	22,5	35,0	104,5	57,0	30 bar	10	40	
1100231	1"1/4	90,0	14,5	30,0	43,0	120,0	63,0	20 bar	5	20	
1100232	1"1/2	99,0	15,5	35,0	50,0	168,0	80,0	20 bar	4	16	
1100233	2"	118,0	16,5	45,5	64,0	168,0	86,0	20 bar	2	8	

Working temperature min/max: -20°C +150°C

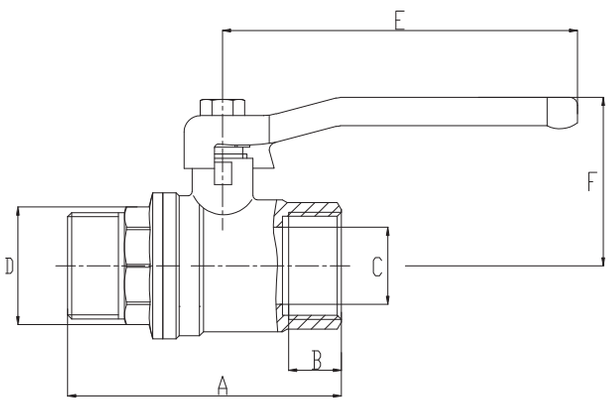

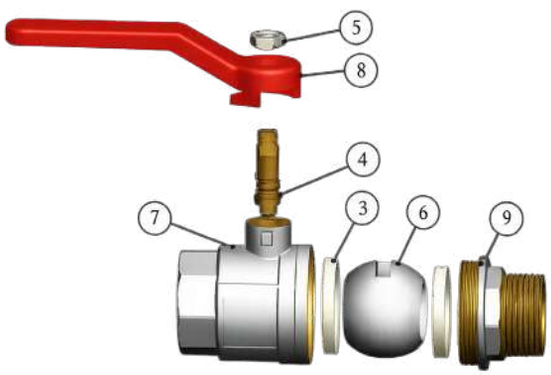

	N° *POS*	DESCRIZIONE *DESCRIPTION*	Q.tà *Q.ty*	MATERIALE *MATERIAL*	
TENUTA	3	SEAT	2	P.T.F.E.	P.T.F.E.
ASTA DI MANOVRA	4	STEM	1	CW617N	OTTONE
DADO	5	NUT	1	ACCIAIO NICHEL.	ACCIAIO NICHEL.
SFERA	6	BALL	1	CW617N	OTTONE
CORPO	7	BODY	1	CW617N	OTTONE
MANIGLIA	8	HANDLE	1	FE	ACCIAIO
CALOTTA	9	BONNET	1	CW617N	OTTONE

ART. 302A

- R E -



Valvola a sfera M.F. con leva SERIE PESANTE

M.F. ball valve, with handle, body nickeled brass - HEAVY TYPE

Material: Lever handle in steel,
body in nickel plated brass CW617N, P.T.F.E. gasket
Thread: UNI ISO 228-1
Norm: DM 174 06/04/2004

Codice - *Code*	Ø	A mm	B mm	C mm	E mm	F mm	Pressure kg/cm2	Conf. - *Pack*		€ Cad. - *€ each*
1100248	1/2"	55	11,5	15	87	43	50 bar	10	90	
1100249	3/4"	61	11,5	20	87	47	40 bar	15	60	
1100250	1"	75	14,5	25	104	57	40 bar	10	40	
1100251	1"1/4	88	16,5	32	120	69	30 bar	5	20	
1100252	1"1/2	100	19	40	120	75	30 bar	4	16	
1100253	2"	115	20	50	150	91	25 bar	2	8	

Working temperature min/max: -20°C +150°C

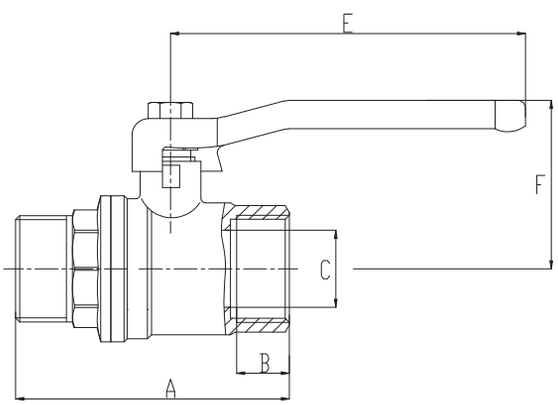

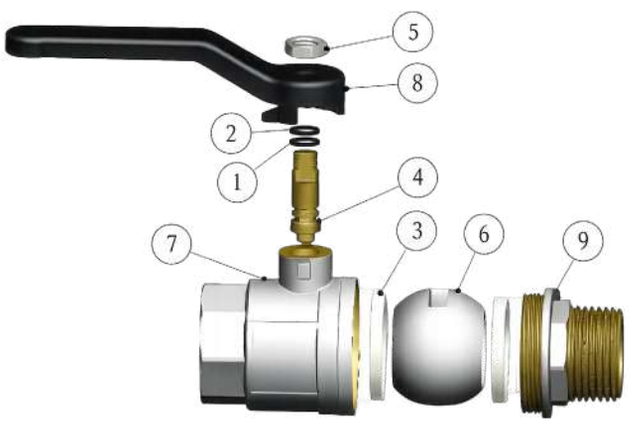

	N° *POS*	DESCRIZIONE *DESCRIPTION*	Q.tà *Q.ty*	MATERIALE *MATERIAL*	
O-RING	1	O-RING	1	EPDM	EPDM
O-RING	2	O-RING	1	FKM	FKM
TENUTA	3	SEAT	2	P.T.F.E.	P.T.F.E.
ASTA DI MANOVRA	4	STEM	1	CW617N	OTTONE
DADO	5	NUT	1	ACCIAIO NICHEL.	ACCIAIO NICHEL.
SFERA	6	BALL	1	CW617N	OTTONE
CORPO	7	BODY	1	CW617N	OTTONE
MANIGLIA	8	HANDLE	1	FE	ACCIAIO
CALOTTA	9	BONNET	1	CW617N	OTTONE

ART. 304 - R E -

Valvola a sfera F.F. con maniglia piatta

F.F. ball valve, with flat handle, body nickeled brass

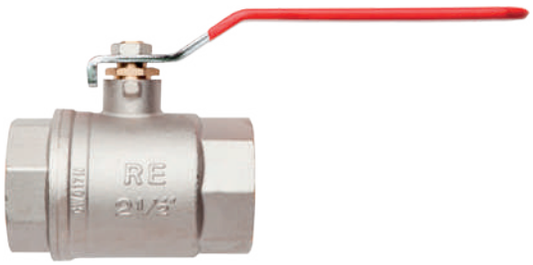

Material: Flat lever handle in steel,
body in nickel plated brass CW617N, P.T.F.E. gasket
Thread: UNI ISO 228-1
Norm: DM 174 06/04/2004

Codice - *Code*	Ø	A mm	B mm	C mm	D mm	E mm	F mm	Pressure kg/cm2	Conf. - *Pack*		€ Cad. - *€ each*
1100068	1/2"	53,0	12,5	14,0	24,5	79,0	41,0	30 bar	10	90	
1100069	3/4"	60,0	13,0	19,0	29,5	79,0	44,5	30 bar	15	60	
1100070	1"	65,5	13,0	22,5	36,0	104,0	57,0	30 bar	10	40	
1100071	1"1/4	76,5	14,5	30,0	46,0	104,0	63,0	20 bar	5	20	
1100072	1"1/2	84,5	15,5	35,0	52,5	166,0	80,0	20 bar	4	16	
1100073	2"	100,0	16,5	45,5	65,0	166,0	86,0	20 bar	2	8	
1100074	2"1/2	124,5	20,0	59,0	82,5	200,0	105,0	16 bar	1	6	
1100075	3"	154,0	22,0	73,0	100,0	236,0	130,0	16 bar	1	4	
1100077	4"	177,0	24,0	95,0	126,0	236,0	144,0	16 bar	1	2	

Working temperature min/max: -20°C +150°C

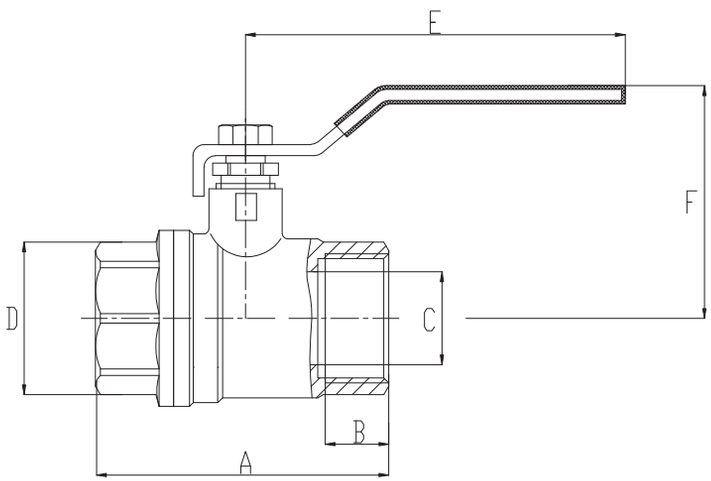

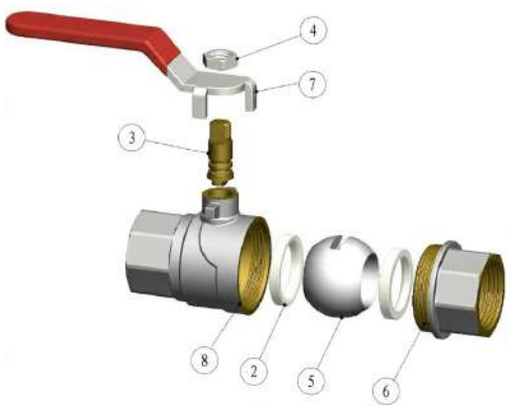

	N° *POS*	DESCRIZIONE *DESCRIPTION*	Q.tà *Q.ty*	MATERIALE *MATERIAL*	
SEDE	2	SEAT	2	P.T.F.E.	P.T.F.E.
ASTA DI MANOVRA	3	STEM	1	CW617N	OTTONE
DADO	4	FIXING NUT	1	ACCIAIO NICHEL.	ACCIAIO NICHEL.
SFERA	5	BALL	1	CW617N	OTTONE
CALOTTA	6	BONNET	1	CW617N	OTTONE
MANIGLIA	7	LEVEL HANDLE	1	FE	ACCIAIO
CORPO	8	BODY	1	CW617N	OTTONE

ART. 306 - R E -

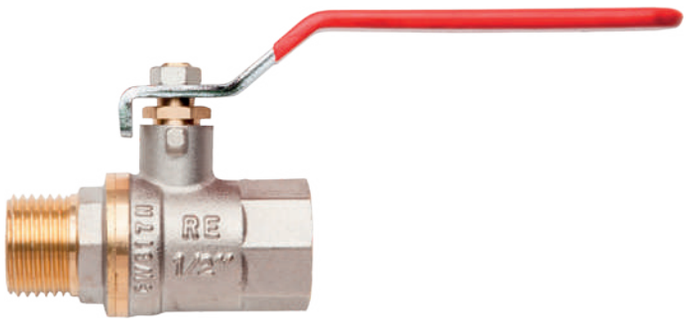

Valvola a sfera M.F. con maniglia piatta

M.F. ball valve, with flat handle, body nickeled brass

Material: Flat lever handle in steel,
body in nickel plated brass CW617N, P.T.F.E. gasket
Thread: UNI ISO 228-1
Norm: DM 174 06/04/2004

Codice - *Code*	Ø	A mm	B mm	C mm	D mm	E mm	F mm	Pressure kg/cm2	Conf. - *Pack*		€ Cad. - *€ each*
1100266	1/4"	51,0	9,0	8,0	13,5	65,0	32,0	30 bar	20	180	
1100267	3/8"	54,0	10,5	10,0	17,5	65,0	34,0	30 bar	15	135	
1100268	1/2"	61,0	12,5	14,0	22,0	79,0	41,0	30 bar	10	90	
1100269	3/4"	67,5	13,0	19,0	27,5	79,0	44,5	30 bar	15	60	
1100270	1"	74,5	13,0	22,5	35,0	104,0	57,0	30 bar	10	40	
1100271	1"1/4	90,0	14,5	30,0	43,0	104,0	63,0	20 bar	5	20	
1100272	1"1/2	99,0	15,5	35,0	50,0	166,0	80,0	20 bar	4	16	
1100273	2"	118,0	16,5	45,5	64,0	166,0	86,0	20 bar	2	8	

Working temperature min/max: -20°C +150°C

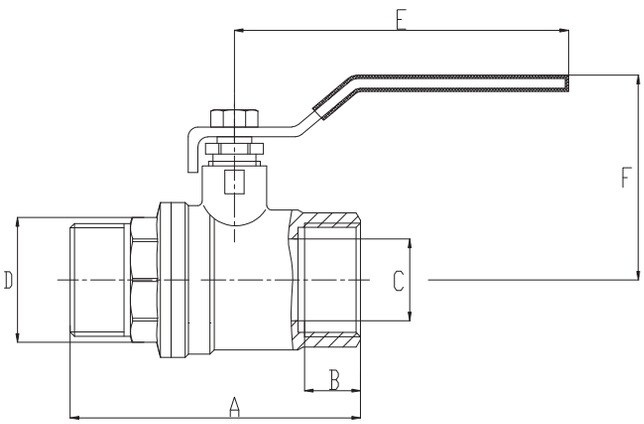

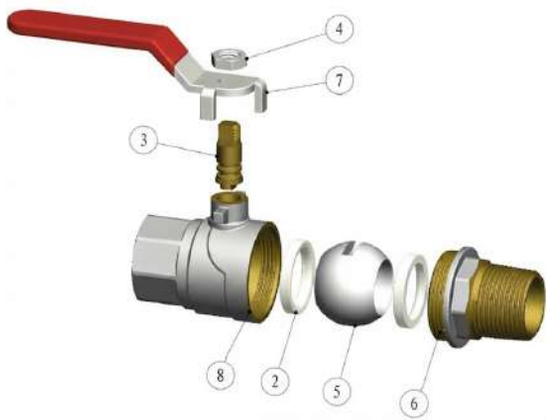

	N° *POS*	DESCRIZIONE *DESCRIPTION*	Q.tà *Q.ty*	MATERIALE *MATERIAL*	
SEDE	2	SEAT	2	P.T.F.E.	P.T.F.E.
ASTA DI MANOVRA	3	STEM	1	CW617N	OTTONE
DADO	4	FIXING NUT	1	ACCIAIO NICHEL.	ACCIAIO NICHEL.
SFERA	5	BALL	1	CW617N	OTTONE
CALOTTA	6	BONNET	1	CW617N	OTTONE
MANIGLIA	7	LEVEL HANDLE	1	FE	ACCIAIO
CORPO	8	BODY	1	CW617N	OTTONE

ART. 308 - R E -

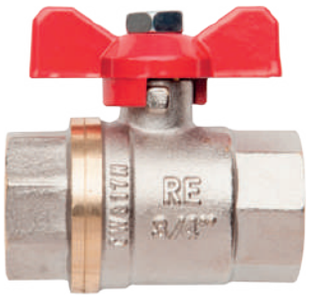

Valvola a sfera F.F. con maniglia a farfalla

F.F. ball valve, butterfly handle, body nickeled brass

Material: T handle,
body in nickel plated brass CW617N, P.T.F.E. gasket
Thread: UNI ISO 228-1
Norm: DM 174 06/04/2004

Codice - *Code*	Ø	A mm	B mm	C mm	D mm	E mm	F mm	Pressure kg/cm2	Conf. - *Pack*		€ Cad. - *€ each*
1102027	3/8"	46	11	11,5	18,3	51,0	34,5	30 bar	20	180	
1102028	1/2"	53,0	12,5	14,0	24,5	51,0	39,5	30 bar	15	135	
1102029	3/4"	60,0	13,0	19,0	29,5	51,0	43,0	30 bar	10	90	
1102030	1"	65,5	13,0	22,5	36,0	104,5	53,5	30 bar	10	40	

Working temperature min/max: -20°C +150°C

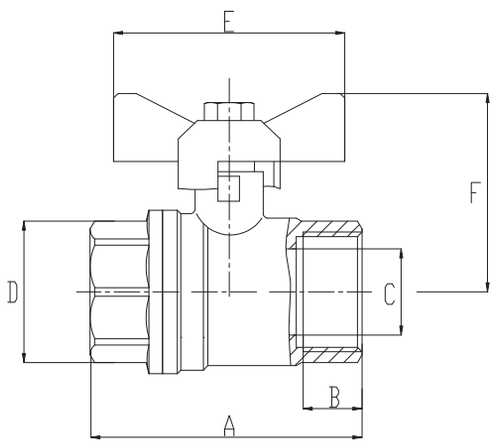

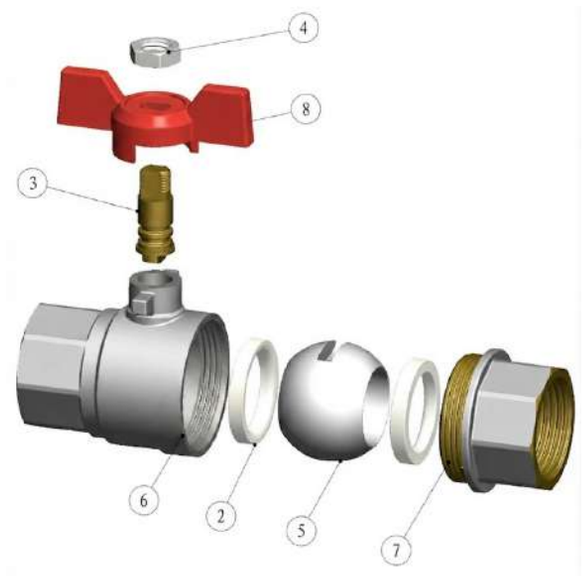

	N° *POS*	DESCRIZIONE *DESCRIPTION*	Q.tà *Q.ty*	MATERIALE *MATERIAL*	
SEDE	2	SEAT	2	P.T.F.E.	P.T.F.E.
ASTA DI MANOVRA	3	STEM	1	CW617N	OTTONE
DADO	4	FIXING NUT	1	ACCIAIO NICHEL.	ACCIAIO NICHEL.
SFERA	5	BALL	1	CW617N	OTTONE
CORPO	6	BODY	2	CW617N	OTTONE
CALOTTA	7	BONNET	1	CW617N	OTTONE
MANIGLIA	8	BUTTERF HANDLE	1	FE	ACCIAIO

ART. 308A - R E - **NEW**



Valvola a sfera F.F. con maniglia a farfalla SERIE PESANTE

F.F. ball valve, butterfly handle, body nickeled brass

Material: T handle,
body in nickel plated brass CW617N, P.T.F.E. gasket
Thread: UNI ISO 228-1
Norm: DM 174 06/04/2004

Codice - *Code*	Ø	A mm	B mm	D mm	E mm	F mm	Pressure kg/cm2	Conf. - *Pack*		€ Cad. - *€ each*
NEW 1102048	1/2"	48,0	10,5	15,0	50	37	50 bar	12	120	
NEW 1102049	3/4"	55,0	10,5	20,0	50	41	40 bar	10	100	
NEW 1102050	1"	67,0	13,0	25,0	60	47	40 bar	8	64	

Working temperature min/max: -20°C +150°C

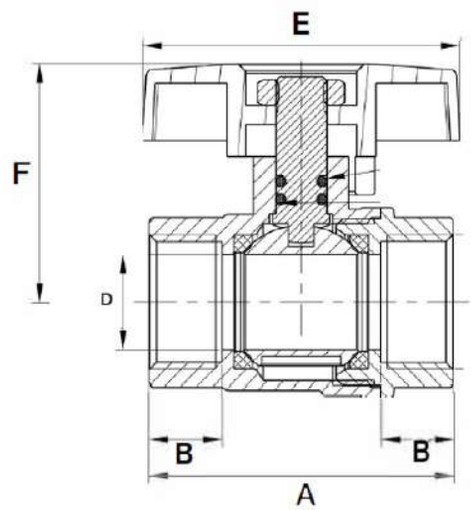

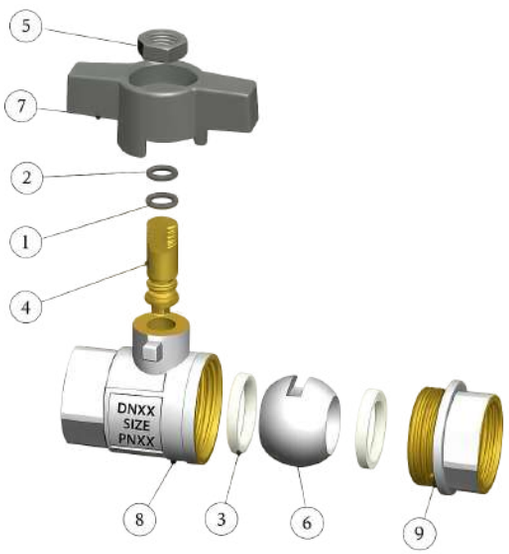

	N° *POS*	DESCRIZIONE *DESCRIPTION*	Q.tà *Q.ty*	MATERIALE *MATERIAL*	
O-RING	1	O-RING	1	EPDM	EPDM
O-RING	2	O-RING	1	FKM	FKM
TENUTA	3	SEAT	2	P.T.F.E.	P.T.F.E.
ASTA DI MANOVRA	4	STEM	1	CW617N	OTTONE
DADO	5	NUT	1	ACCIAIO NICHEL.	ACCIAIO NICHEL.
SFERA	6	BALL	1	CW617N	OTTONE
MANIGLIA FARFALLA	7	LEVEL HANDLE	1	AL	ALLUMINIO
CALOTTA	8	BONNET	1	CW617N	OTTONE
CORPO	9	BODY	1	CW617N	OTTONE

ART. 310 - R E -

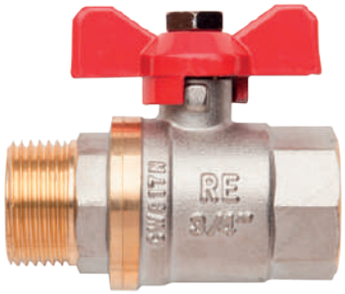

Valvola a sfera M.F. con maniglia a farfalla

M.F. ball valve, butterfly handle, body nickeled brass

Material: T handle,
body in nickel plated brass CW617N, P.T.F.E. gasket
Thread: UNI ISO 228-1
Norm: DM 174 06/04/2004

Codice - *Code*	Ø	A mm	B mm	C mm	D mm	E mm	F mm	Pressure kg/cm2	Conf. - *Pack*		€ Cad. - *€ each*
1102226	1/4"	51	9	8	13,5	49,0	33	30 bar	10	200	
1102227	3/8"	54	10,5	10	17,5	51,0	34,5	30 bar	20	180	
1102228	1/2"	61,0	12,5	14,0	22,0	51,0	39,5	30 bar	15	135	
1102229	3/4"	67,5	13,0	19,0	27,5	62,0	43,0	30 bar	10	90	
1102230	1"	74,5	13,0	22,5	35,0	104,5	53,5	30 bar	10	40	

Working temperature min/max: -20°C +150°C

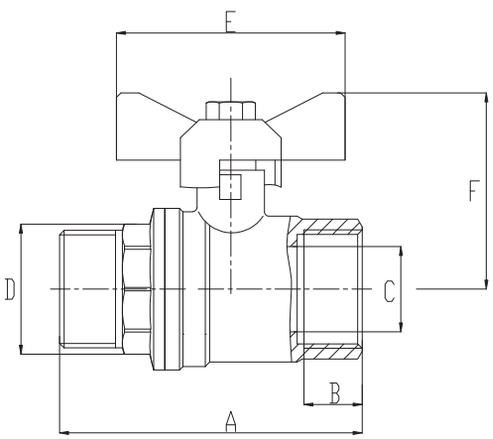

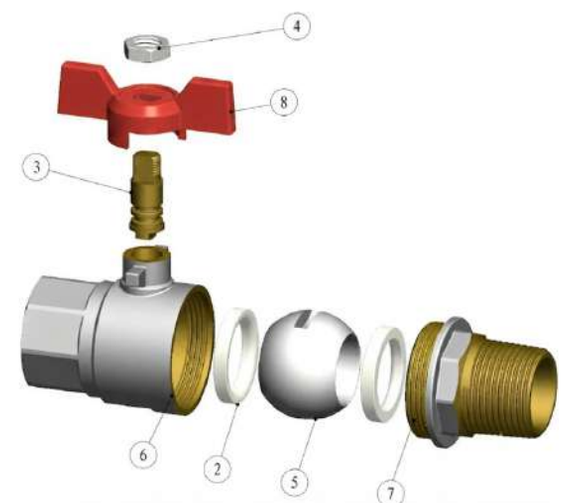

	N° *POS*	DESCRIZIONE *DESCRIPTION*	Q.tà *Q.ty*	MATERIALE *MATERIAL*	
SEDE	2	SEAT	2	P.T.F.E.	P.T.F.E.
ASTA DI MANOVRA	3	STEM	1	CW617N	OTTONE
DADO	4	FIXING NUT	1	ACCIAIO NICHEL.	ACCIAIO NICHEL.
SFERA	5	BALL	1	CW617N	OTTONE
CORPO	6	BODY	2	CW617N	OTTONE
CALOTTA	7	BONNET	1	CW617N	OTTONE
MANIGLIA	8	BUTTERF HANDLE	1	FE	ACCIAIO

ART. 310A - R E - **NEW**



Valvola a sfera M.F. con maniglia a farfalla SERIE PESANTE

M.F. ball valve, butterfly handle, body nickeled brass

Material: T handle,
body in nickel plated brass CW617N, P.T.F.E. gasket
Thread: UNI ISO 228-1
Norm: DM 174 06/04/2004

Codice - *Code*	Ø	A mm	B mm	B1 mm	D mm	E mm	F mm	Pressure kg/cm2	Conf. - *Pack*		€ Cad. - *€ each*
NEW 1102248	1/2"	55,0	10,5	12,0	15,0	50	37	50 bar	12	120	
NEW 1102249	3/4"	60,5	10,5	12,0	20,0	50	41	40 bar	10	100	
NEW 1102250	1"	75,0	13,0	16,0	25,0	60	47	40 bar	8	64	

Working temperature min/max: -20°C +150°C

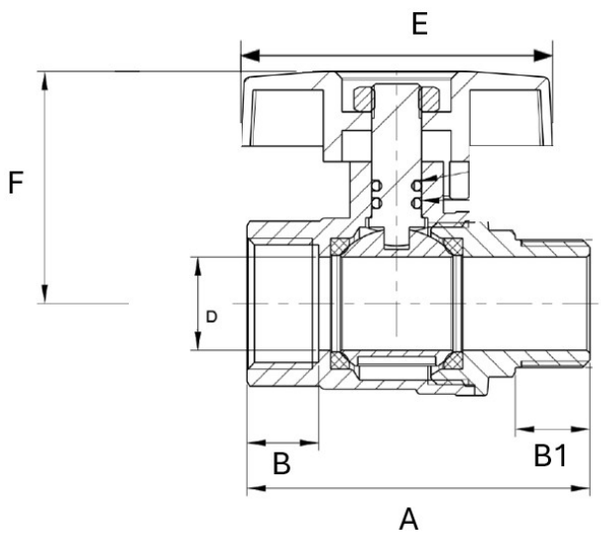

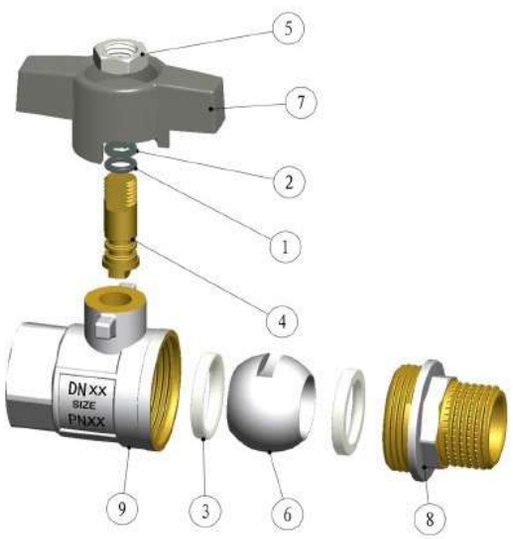

	N° *POS*	DESCRIZIONE *DESCRIPTION*	Q.tà *Q.ty*	MATERIALE *MATERIAL*	
O-RING	1	O-RING	1	EPDM	EPDM
O-RING	2	O-RING	1	FKM	FKM
TENUTA	3	SEAT	2	P.T.F.E.	P.T.F.E.
ASTA DI MANOVRA	4	STEM	1	HPb58-3A	OTTONE
DADO	5	NUT	1	ACCIAIO NICHEL.	ACCIAIO NICHEL.
SFERA	6	BALL	1	HPb58-3A	OTTONE
MANIGLIA FARFALLA	7	LEVEL HANDLE	1	AL	ALLUMINIO
CALOTTA	8	BONNET	1	CW617N	OTTONE
CORPO	9	BODY	1	CW617N	OTTONE

ART. 312 - R E -

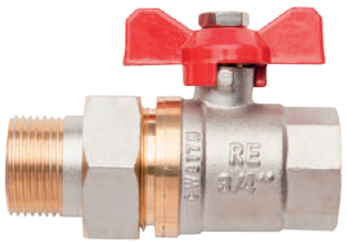

Valvola a sfera con bocchettone M.F.

M.F. ball valve, butterfly handle, body nickeled brass

Material: T handle,
body in nickel plated brass CW617N, P.T.F.E. gasket
Thread: UNI ISO 228-1
Norm: DM 174 06/04/2004

Codice - *Code*	Ø	A mm	B mm	C mm	D mm	E mm	F mm	Pressure kg/cm2	Conf. - *Pack*		€ Cad. - *€ each*
1103028	1/2"	78,0	11,5	14,0	30,0	51,0	39,5	30 bar	10	90	
1103029	3/4"	82,5	13,0	19,0	36,0	62,0	43,0	30 bar	20	80	
1103030	1"	102,0	14,0	22,5	45,5	104,5	53,5	30 bar	10	40	
1103031	1"1/4	118	14,5	30	56	104,5	58	20 bar	5	20	
1103032	1"1/2	127	15,5	35	68	168	80	20 bar	2	8	

Leva a farfalla fino a 1"1/4 compresa

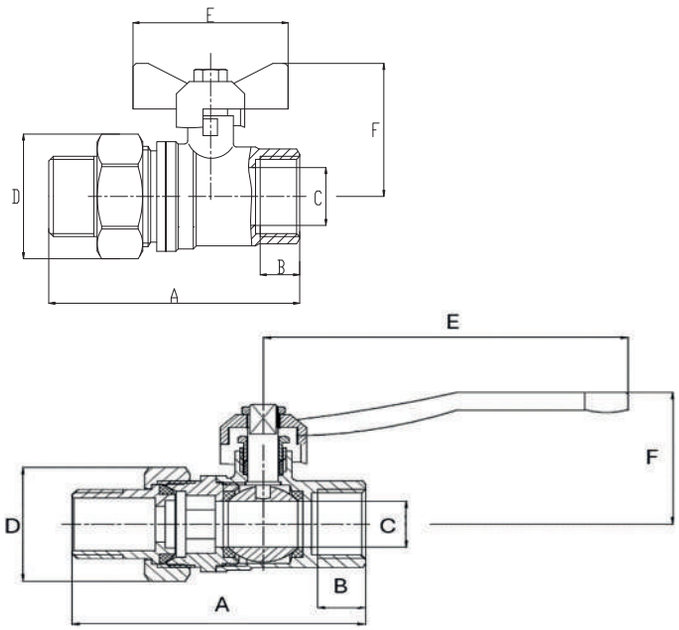

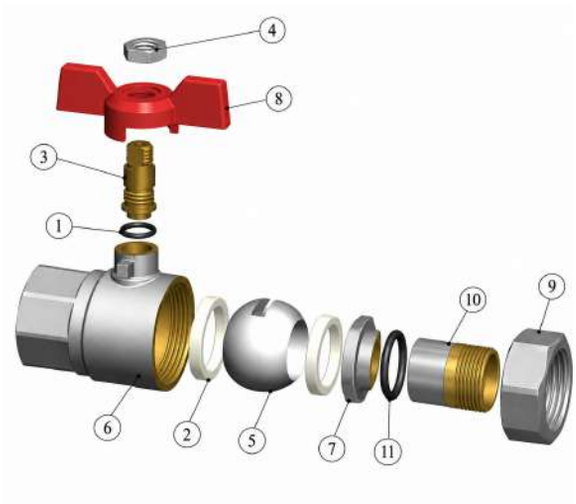

	N° *POS*	DESCRIZIONE *DESCRIPTION*	Q.tà *Q.ty*	MATERIALE *MATERIAL*	
CORPO	1	BODY	1	CW617N	OTTONE
SEDE	2	SEAT	2	P.T.F.E.	P.T.F.E.
SFERA	3	BALL	1	HPb58-3A	OTTONE
DADO	4	COUPLING NUT	1	CW617N	OTTONE
NIPPLES	5	PIPE JOINT	1	CW617N	OTTONE
GUARNIZIONE	6	SILICONE PAD	1	HTV	SILICONE
ASTA DI MANOVRA	7	STEM	1	HPb58-3C	OTTONE
ANELLO DI TENUTA	8	SEALING RING	1	P.T.F.E.	P.T.F.E.
DADO	9	FIXING NUT	1	HPb58-3C	OTTONE
MANIGLIA A FARFALLA	10	BUTTERFLY HANDLE	1	AL	ALLUMINIO
VITE	11	HEX NUT	1	Q235NICKEL-PLATE	ACCIAIO-ZINCATO

ART. 313

- R E -

Valvola a sfera a farfalla a squadro, passaggio totale per collettori

Angle ball valve, full flow, for manifolds

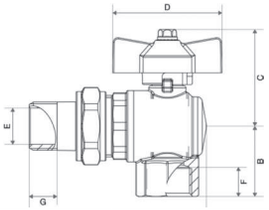



Codice - *Code*	Ø	Pressure kg/cm2	A mm	B mm	C mm	D mm	E mm	F mm	G mm	Conf. - *Pack*		€ Cad. - *€ each*
1103158	1/2	50 bar	68	32	36	50	16	12,0	14	20	120	
1103159	3/4	40 bar	73,5	34	41	50	21	13,5	14	20	80	
1103160	1	40 bar	106,5	39	50	60	26	14,0	17	10	40	

ART. 350

- R E -

LEVA ALLUMINIO, VITE INOX

Valvola a sfera mini F.F.

FF mini ball valve alluminium handle, ss screw

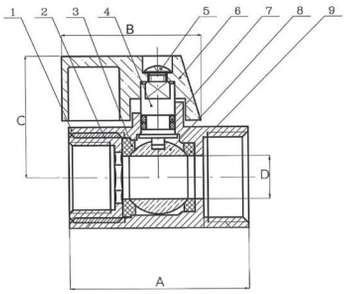



Material: aluminium handle, stainless steel screw, body in chromed plated brass CW617N
Thread: UNI ISO 228-1
Norm: DM 174 06/04/2004

Codice - *Code*	Ø	PN	A mm	B mm	C mm	D mm	Conf. - *Pack*		€ Cad. - *€ each*
1104005	FF 1/8"	16	40,0	31,0	27,5	Ø 8	25	200	
1104006	FF 1/4"	16	40,0	31,0	27,5	Ø 8	25	200	
1104007	FF 3/8"	16	41,5	31,0	26,0	Ø 8	25	200	
1104008	FF 1/2"	16	42,0	31,0	28,0	Ø 10	25	200	

Working temperature min/max: 0°C +90°C

ART. 352

- R E -

LEVA ALLUMINIO, VITE INOX

Valvola a sfera mini M.F.

MF mini ball valve alluminium handle, ss screw

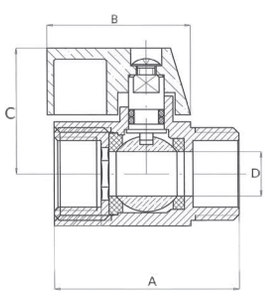

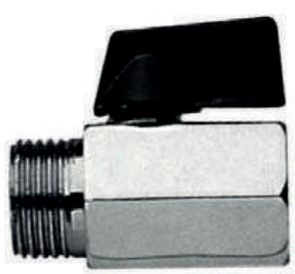

Material: aluminium handle, stainless steel screw, body in chromed plated brass CW617N
Thread: UNI ISO 228-1
Norm: DM 174 06/04/2004

Codice - *Code*	Ø	PN	A mm	B mm	C mm	D mm	Conf. - *Pack*		€ Cad. - *€ each*
1104205	MF 1/8"	16	42,0	31,0	26,0	Ø 8	25	200	
1104206	MF 1/4"	16	42,0	31,0	26,0	Ø 8	25	200	
1104207	MF 3/8"	16	41,5	31,0	26,0	Ø 8	25	200	
1104208	MF 1/2"	16	41,0	31,0	28,0	Ø 10	25	200	
1104209	MF 3/4"	16	52,0	31,0	30,8	Ø 14,5	25	200	

Working temperature min/max: 0°C +90°C

	N° *POS*	DESCRIZIONE *DESCRIPTION*	Q.tà *Q.ty*	MATERIALE *MATERIAL*	
CORPO	1	BODY	1	CW617N	OTTONE
DADO	2	FEMALE HEXAGONAL NUT	1	HPb57-3	OTTONE
GUARNIZIONE DI TENUTA	3	SEALING GASKET	1	P.T.F.E.	P.T.F.E.
STELO	4	STEM	1	HPb57-3	OTTONE
VITE	5	SCREW	1	STAINLES STEEL 304	ACCIAIO-ZINCATO
LEVA	6	HANDLE	1	ALUMINIUM ALLOY	ALLUMINIO
O-RING	7	O-RING	2	SILICON	SILICONE
SFERA	8	BALL	1	HPb57-3	OTTONE
GUARNIZIONE	9	SEALING GASKET	1	P.T.F.E.	P.T.F.E.

ART. 353 - R E - **NEW**

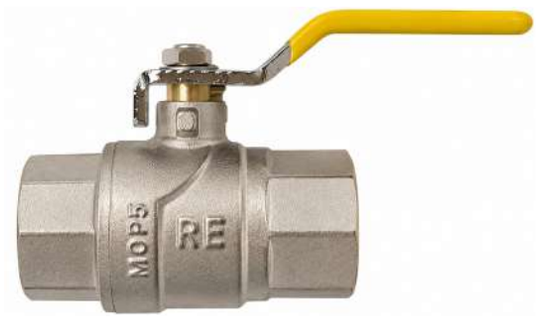

Valvola a sfera F.F. per GAS, PASSAGGIO TOTALE

F.F. ball valve for GAS, lever handle, body nickeled brass, full port

Material: Lever handle in steel,
body in nickel plated brass CW617N, P.T.F.E. gasket
Thread: UNI EN 10226-1 (ex iso 7/1)
Norm: EN331 DVGW, MOP 5

Codice - *Code*	A Ø	D mm	L mm	L1 mm	L2 mm	L3 mm	H mm	Conf. - *Pack*		€ Cad. - *€ each*
NEW 1102408	1/2"	15	57	15,5	15,5	85	45	12	120	
NEW 1102409	3/4"	20	64	16,0	16,0	85	50	10	100	
NEW 1102410	1"	25	74	18,5	18,5	103	56	8	64	
NEW 1102411	* 1"14	32	84	21,5	21,5	112	66	4	4	
NEW 1102412	* 1"1/2	40	94	21,5	21,5	143	77	2	2	
NEW 1102413	* 2"	50	108	26,0	26,0	143	81	1	1	

Working temperature min/max: -20°C +60°C
* codice no -RE-

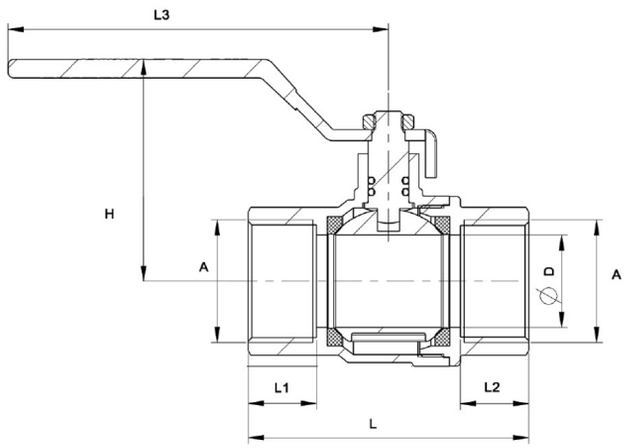

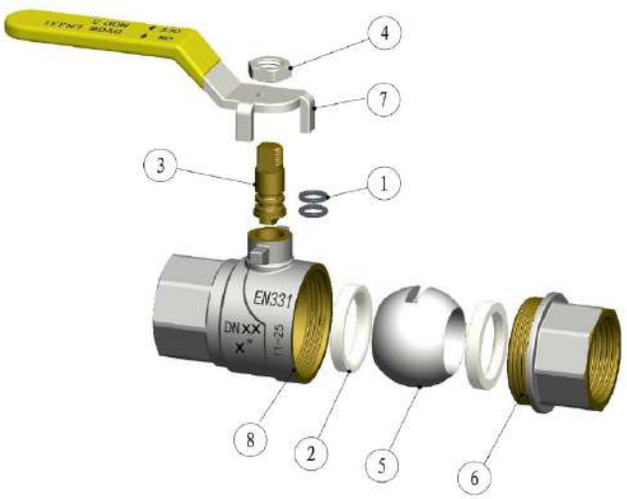

	N° *POS*	DESCRIZIONE *DESCRIPTION*	Q.tà *Q.ty*	MATERIALE *MATERIAL*	
O-RING	1	O-RING	2	NBR	NBR
TENUTA	2	SEAT	2	P.T.F.E.	P.T.F.E.
ASTA DI MANOVRA	3	STEM	1	CW617N	OTTONE
DADO	4	NUT	1	ACCIAIO NICHEL.	ACCIAIO NICHEL.
SFERA	5	BALL	1	CW617N	OTTONE
CALOTTA	6	BONNET	1	CW617N	OTTONE
MANIGLIA	7	LEVEL HANDLE	1	FE	ACCIAIO
CORPO	8	BODY	1	CW617N	OTTONE NICHEL.

Accessori per gas vedi pag. 365 | Gas accessories see page 365

ART. 354 - R E - NEW



Valvola a sfera M.F. per GAS, PASSAGGIO TOTALE

M.F. ball valve for GAS, lever handle, body nickeled brass, full port

Material: Lever handle in steel,
body in nickel plated brass CW617N, P.T.F.E. gasket
Thread: UNI EN 10226-1 (ex iso 7/1)
Norm: EN331 DVGW, MOP 5

Codice - *Code*	A Ø	D mm	L mm	L1 mm	L2 mm	L3 mm	H mm	Conf. - *Pack*		€ Cad. - *€ each*
NEW 1102458	1/2"	15	67	15,5	17,5	85	45	12	120	
NEW 1102459	3/4"	20	74	16,0	18,5	85	50	10	100	
NEW 1102460	1"	25	83	18,5	18,5	103	56	8	64	

Working temperature min/max: -20°C +60°C

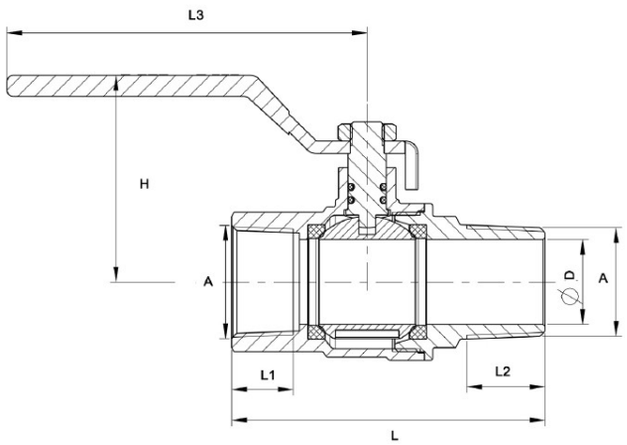

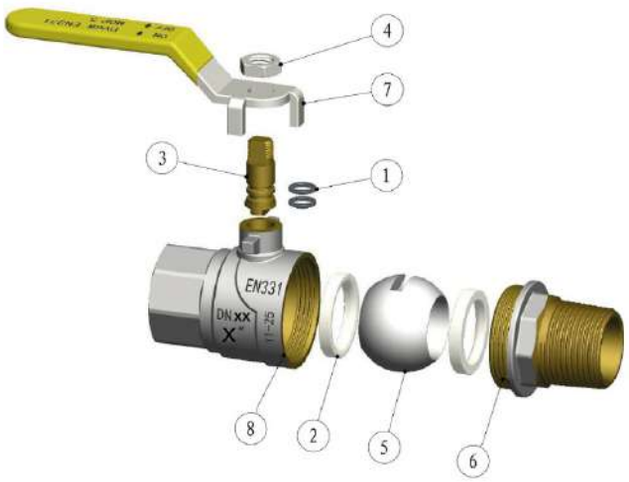

	N° *POS*	DESCRIZIONE *DESCRIPTION*	Q.tà *Q.ty*	MATERIALE *MATERIAL*	
O-RING	1	O-RING	2	NBR	NBR
TENUTA	2	SEAT	2	P.T.F.E.	P.T.F.E.
ASTA DI MANOVRA	3	STEM	1	CW617N	OTTONE
DADO	4	NUT	1	ACCIAIO NICHEL.	ACCIAIO NICHEL.
SFERA	5	BALL	1	CW617N	OTTONE
CALOTTA	6	BONNET	1	CW617N	OTTONE
MANIGLIA	7	LEVEL HANDLE	1	FE	ACCIAIO
CORPO	8	BODY	1	CW617N	OTTONE NICHEL.

Accessori per gas vedi pag. 365 | Gas accessories see page 365

ART. 355 - R E - **NEW**



Valvola a sfera F.F. per GAS maniglia farfalla, PASSAGGIO TOTALE

F.F. ball valve for GAS, butterfly handle, body nickeled brass, full port

Material: Butterfly handle in aluminium,
body in nickel plated brass CW617N, P.T.F.E. gasket
Thread: UNI EN 10226-1 (ex iso 7/1)
Norm: EN331 DVGW, MOP 5

Codice - *Code*	A Ø	D mm	L mm	L1 mm	L2 mm	L3 mm	H mm	Conf. - *Pack*		€ Cad. - *€ each*
NEW 2346808	1/2"	15	57	15,5	17,5	50	38,0	12	120	
NEW 2346809	3/4"	20	64	16,0	18,5	50	41,5	10	100	
NEW 2346810	1"	25	74	18,5	18,5	64	52,0	8	64	

Working temperature min/max: -20°C +60°C

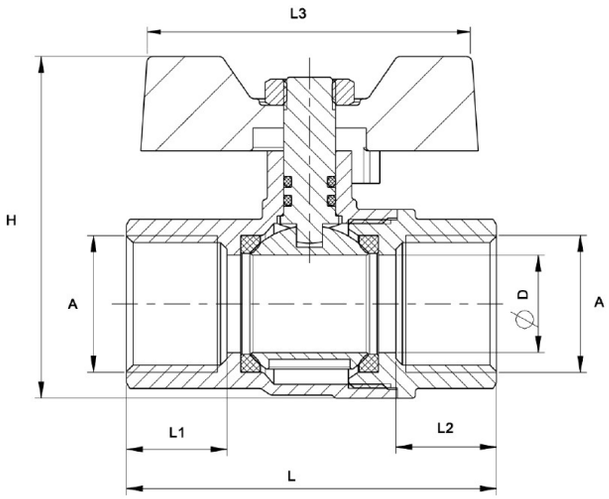

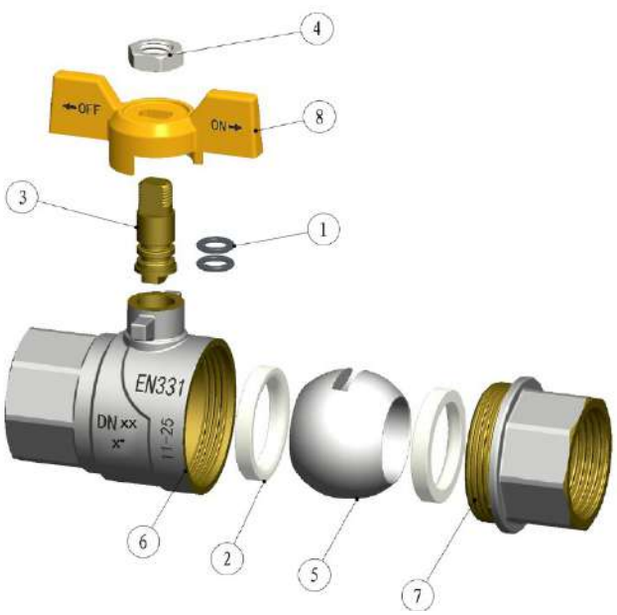

	N° *POS*	DESCRIZIONE *DESCRIPTION*	Q.tà *Q.ty*	MATERIALE *MATERIAL*	
O-RING	1	O-RING	2	NBR	NBR
TENUTA	2	SEAT	2	P.T.F.E.	P.T.F.E.
ASTA DI MANOVRA	3	STEM	1	CW617N	OTTONE
DADO	4	NUT	1	ACCIAIO NICHEL.	ACCIAIO NICHEL.
SFERA	5	BALL	1	CW617N	OTTONE
CALOTTA	6	BONNET	1	CW617N	OTTONE
MANIGLIA	7	LEVEL HANDLE	1	AL	ALLUMINIO
CORPO	8	BODY	1	CW617N	OTTONE NICHEL.

Accessori per gas vedi pag. 365 | Gas accessories see page 365

ART. 356 - R E - **NEW**

Valvola a sfera M.F. per GAS maniglia farfalla, PASSAGGIO TOTALE

M.F. ball valve for GAS, butterfly handle, body nickeled brass, full port

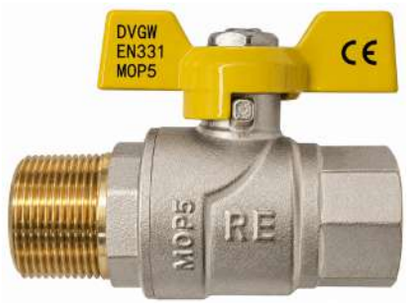

Material: Butterfly handle in aluminium,
body in nickel plated brass CW617N, P.T.F.E. gasket
Thread: UNI EN 10226-1 (ex iso 7/1)
Norm: EN331 DVGW, MOP 5

Codice - *Code*	A Ø	D mm	L mm	L1 mm	L2 mm	L3 mm	H mm	Conf. - *Pack*		€ Cad. - *€ each*
NEW 2346608	1/2"	15	67	15,5	17,5	50	38,0	12	120	
NEW 2346609	3/4"	20	74	16,0	18,5	50	41,5	10	100	
NEW 2346610	1"	25	83	18,5	18,5	64	52,0	8	64	

Working temperature min/max: -20°C +60°C

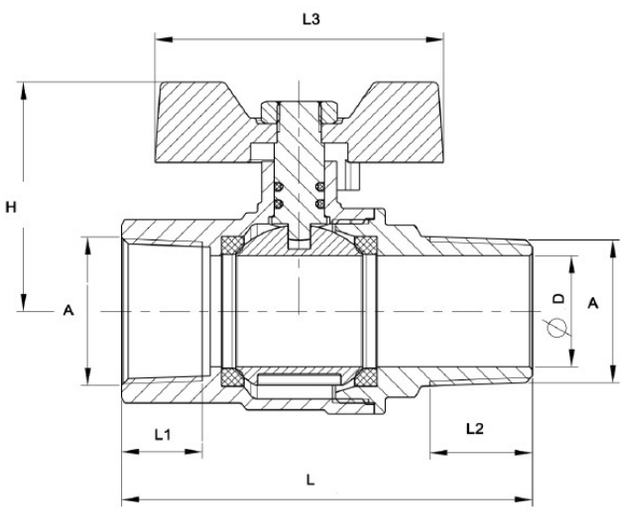

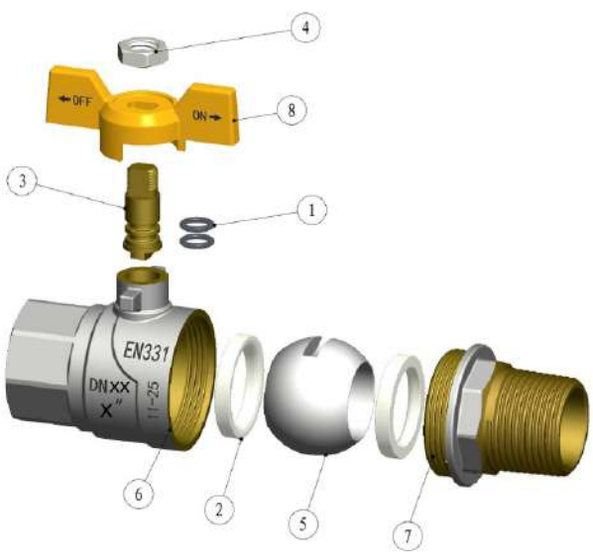

	N° *POS*	DESCRIZIONE *DESCRIPTION*	Q.tà *Q.ty*	MATERIALE *MATERIAL*	
O-RING	1	O-RING	2	NBR	NBR
TENUTA	2	SEAT	2	P.T.F.E.	P.T.F.E.
ASTA DI MANOVRA	3	STEM	1	CW617N	OTTONE
DADO	4	NUT	1	ACCIAIO NICHEL.	ACCIAIO NICHEL.
SFERA	5	BALL	1	CW617N	OTTONE
CALOTTA	6	BONNET	1	CW617N	OTTONE
MANIGLIA	7	LEVEL HANDLE	1	AL	ALLUMINIO
CORPO	8	BODY	1	CW617N	OTTONE NICHEL.

Accessori per gas vedi pag. 365 | Gas accessories see page 365

ART. 360 - R E - NEW

Maniglia blu per valvola a sfera art.300/302

Blu handle for ball valve art. 300/302



Codice - *Code*	Ø	€ Cad. - *€ each*
NEW 1100307	3/8"-1/2"-3/4"	
NEW 1100310	1"-1"1/4	
NEW 1100312	1"1/2-2"	
NEW 1100315	2"1/2	
NEW 1100317	3"	

ART. 361 - R E - NEW

Maniglia nera per valvola a sfera art.300/302

Black handle for ball valve art. 300/302



Codice - *Code*	Ø	€ Cad. - *€ each*
NEW 1100327	3/8"-1/2"-3/4"	
NEW 1100330	1"-1"1/4	
NEW 1100332	1"1/2-2"	
NEW 1100335	2"1/2	
NEW 1100337	3"	

ART. 363 - R E - NEW

Maniglia blu per valvola a sfera art.304/306

Blu handle for ball valve art. 304/306



Codice - *Code*	Ø	€ Cad. - *€ each*
NEW 1100338	1/2"-3/4"	
NEW 1100341	1"-1"1/4	
NEW 1100342	1"1/2-2"	
NEW 1100344	2"1/2	
NEW 1100345	3"	

ART. 364 - R E - NEW

Maniglia nera per valvola a sfera art.304/306

Black handle for ball valve art. 304/306



Codice - *Code*	Ø	€ Cad. - *€ each*
NEW 1100378	1/2"-3/4"	
NEW 1100381	1"-1"1/4	
NEW 1100382	1"1/2-2"	
NEW 1100384	2"1/2	
NEW 1100385	3"	

ART. 366 - R E - NEW

Maniglia blu per valvola a sfera art.308/310

Blu handle for ball valve art. 308/310



Codice - *Code*	Ø	€ Cad. - *€ each*
NEW 1100390	3/8"-1/2"-3/4"	
NEW 1100391	1"	

ART. 367 - R E - NEW

Maniglia nera per valvola a sfera art.308/310

Black handle for ball valve art. 308/310



Codice - *Code*	Ø	€ Cad. - *€ each*
NEW 1100395	3/8"-1/2"-3/4"	
NEW 1100396	1"	



maniglia gialla per GAS vedi Art. 5276

ART. 370

Valvola a sfera a leva a passaggio totale in ottone sbiancato FF

FF white brass total passage ball valve

Codice *Code*	Ø	PN bar	Conf. - *Pack*		€ Cad. *€ each*
1100006	1/4"	50	12	168	
1100007	3/8"	50	12	168	
1100008	1/2"	50	12	108	
1100009	3/4"	40	8	64	
1100010	1"	40	8	48	
1100011	1"1/4	30	4	32	
1100012	1"1/2	30	2	16	
1100013	2"	25	2	10	
1100014	2"1/2	18	1	7	
1100015	3"	16	1	4	
1100017	4"	14	1	2	

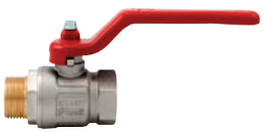

ART. 372

Valvola a sfera a leva a passaggio totale in ottone sbiancato MF

MF white brass total passage ball valve

Codice *Code*	Ø	PN bar	Conf. - *Pack*		€ Cad. *€ each*
1100206	1/4"	50	12	168	
1100207	3/8"	50	12	168	
1100208	1/2"	50	12	108	
1100209	3/4"	40	8	64	
1100210	1"	40	8	48	
1100211	1"1/4	30	4	32	
1100212	1"1/2	30	2	16	
1100213	2"	25	2	10	
1100214	2"1/2	18	1	7	
1100215	3"	16	1	4	
1100217	4"	14	1	2	



maniglia gialla per GAS vedi Art. 5278

ART. 374

Valvola a sfera a farfalla FF

FF butterfly handle ball valve

Codice *Code*	Ø	PN bar	Conf. - *Pack*		€ Cad. *€ each*
1102006	1/4"	50	15	210	
1102007	3/8"	50	15	210	
1102008	1/2"	50	12	144	
1102009	3/4"	40	8	96	
1102010	1"	40	6	56	
1102011	1"1/4	30	4	32	



maniglia gialla per GAS vedi Art. 5278

ART. 376

Valvola a sfera a farfalla MF

MF butterfly handle ball valve

Codice *Code*	Ø	PN bar	Conf. - *Pack*		€ Cad. *€ each*
1102206	1/4"	50	15	210	
1102207	3/8"	50	15	210	
1102208	1/2"	50	12	144	
1102209	3/4"	40	8	96	
1102210	1"	40	6	56	
1102211	1"1/4	30	4	32	

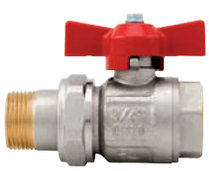

ART. 378

Valvola sfera con bocchettone MF

MF pipe union ball valve

Codice *Code*	Ø	PN bar	Conf. - *Pack*		€ Cad. *€ each*
1103008	1/2"	50	8	96	
1103009	3/4"	40	6	54	
1103010	1"	40	5	40	
1103011	1"1/4	30	3	27	

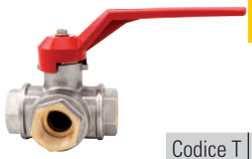

ART. 380

Valvola a sfera 3 vie T, a richiesta a L

T-shapped 3 way ball valve. L-shapped valve upon demand

Codice T *Code T*	Codice L *Code L*	Ø	PN bar	Conf. - *Pack*		€ Cad. *€ each*
1102608	1102658	1/2"	50	4	32	
1102609	1102659	3/4"	50	2	16	
1102610	1102660	1"	45	2	16	
1102611	1102661	1"1/4	35	2	12	
1102612	1102662	1"1/2	35	2	8	
1102613	1102663	2"	35	2	4	



ACQUA POTABILE
MANIGLIA VERDE
ANTILEGIONELLA

ART. 382

Valvola ecologica a sfera a passaggio totale in ottone cromato per acqua potabile FF

Ecologic FF ball valve for drinkable water

Codice *Code*	Ø	PN bar	Conf. - *Pack*		€ Cad. *€ each*
1100406	1/4"	50	12	108	
1100407	3/8"	50	12	108	
1100408	1/2"	50	10	90	
1100409	3/4"	40	8	48	
1100410	1"	40	6	48	
1100411	1"1/4	30	2	16	
1100412	1"1/2	30	2	10	
1100413	2"	25	2	10	



ACQUA POTABILE
MANIGLIA VERDE
ANTILEGIONELLA

ART. 384

Valvola ecologica a sfera a passaggio totale in ottone cromato per acqua potabile MF

Ecologic MF ball valve for drinkable water

Codice *Code*	Ø	PN bar	Conf. - *Pack*		€ Cad. *€ each*
1100416	1/4"	50	12	108	
1100417	3/8"	50	12	108	
1100418	1/2"	50	10	80	
1100419	3/4"	40	8	48	
1100420	1"	40	6	48	
1100421	1"1/4	30	2	16	
1100422	1"1/2	30	2	10	
1100423	2"	25	2	5	



ACQUA POTABILE
MANIGLIA VERDE
ANTILEGIONELLA

ART. 386

Valvola ecologica a sfera FF a passaggio totale in ottone cromato per acqua potabile con leva a farfalla

Ecologic FF butterfly ball valve for drinkable water

Codice *Code*	Ø	PN bar	Conf. - *Pack*		€ Cad. *€ each*
1100506	1/4"	50	15	180	
1100507	3/8"	50	15	180	
1100508	1/2"	50	10	120	
1100509	3/4"	40	8	80	
1100510	1"	40	6	48	



ACQUA POTABILE
MANIGLIA VERDE
ANTILEGIONELLA

ART. 388

Valvola ecologica a sfera MF a passaggio totale in ottone cromato per acqua potabile con leva a farfalla

Ecologic MF butterfly ball valve for drinkable water

Codice *Code*	Ø	PN bar	Conf. - *Pack*		€ Cad. *€ each*
1100516	1/4"	50	15	180	
1100517	3/8"	50	15	180	
1100518	1/2"	50	10	120	
1100519	3/4"	40	6	72	
1100520	1"	40	6	48	

ART. 401

- R E -

Valvola di ritegno a molla
Universal check valve

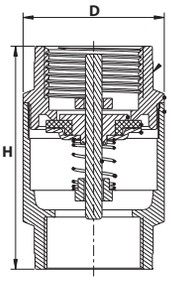



Material: Body in brass, NBR sealing, spring in stainless steel 304
Thread: UNI EN ISO 228/1
Norm: DM 174 06/04/2004

Codice - *Code*	Ø	Pressure kg/cm2	D mm	H mm	Conf. - *Pack*		€ Cad. - *€ each*
2320227	3/8"	25 bar	34,5	54,0	15	90	
2320228	1/2"	25 bar	34,2	56,5	15	90	
2320229	3/4"	25 bar	41,5	64,0	12	48	
2320230	1"	25 bar	47,5	75,0	9	36	
2320231	1"1/4	16 bar	60,5	83,0	6	24	
2320232	1"1/2	16 bar	70,5	93,0	2	8	
2320233	2"	16 bar	87,0	100,0	2	8	
2320234	2"1/2	10 bar	119,0	120,0	1	6	
2320235	3"	10 bar	139,5	138,5	1	4	
2320237	4"	10 bar	154,0	158,0	1	3	

Working temperature min/max: -10°C +100°C. Opening pressure 0,03 Bar

ART. 403

Valvola di ritegno a molla EUROPA originale
Original EUROPA check valve

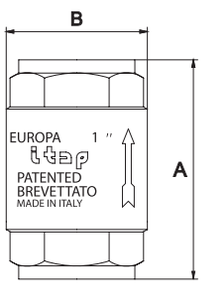



Material: Body in brass, plate in stainless steel, washer in NBR, spring in stainless steel
Thread: ISO228-1 (equal to DIN EN ISO 228 e BS EN ISO 228)

Codice - *Code*	Ø	A mm	B mm	Pressure kg/cm2	Pressione Psi	Conf. - *Pack*		€ Cad. - *€ each*
2320207	3/8"	55,0	34,5	25 bar	362,5	8	112	
2320208	1/2"	58,5	34,5	25 bar	362,5	8	112	
2320209	3/4"	65,0	41,5	25 bar	362,5	6	84	
2320210	1"	74,5	48,0	25 bar	362,5	4	44	
2320211	1"1/4	83,0	60,5	18 bar	261	4	24	
2320212	1"1/2	93,0	71,0	18 bar	261	2	14	
2320213	2"	101,0	87,0	18 bar	261	2	12	
2320214	2"1/2	122,0	120,0	12 bar	174	1	6	
2320215	3"	141,5	140,5	12 bar	174	1	3	
2320217	4"	158,5	172,5	12 bar	174	1	1	

Working temperature min/max: -20°C +100°C

ART. 404

- R E -

Filtro per valvola Europa
Europa valve filter

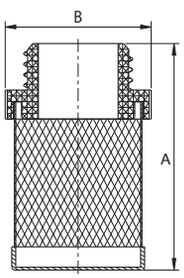



Material: Stainless steel AISI 304, ABS plastic

Codice - *Code*	Ø	A mm	B mm	Grado di filtrazione	Conf. - *Pack*		€ Cad. - *€ each*
2320407	3/8"	42,0	22,5	1200 µm	30	360	
2320408	1/2"	39,0	27,5	1200 µm	56	224	
2320409	3/4"	39,5	34,5	1200 µm	38	152	
2320410	1"	51,0	40,5	1200 µm	20	80	
2320411	1"1/4	56,5	48,5	1200 µm	9	36	
2320412	1"1/2	64,5	58,0	1200 µm	6	24	
2320413	2"	77,5	69,0	1200 µm	4	16	
2320414	2"1/2	97,0	83,5	2000 µm	1	25	
2320415	3"	107,0	94,0	2000 µm	1	16	
2320417	4"	119,0	126,5	2000 µm	1	6	

ART. 406

- R E -

Valvola di fondo
Brass foot valve

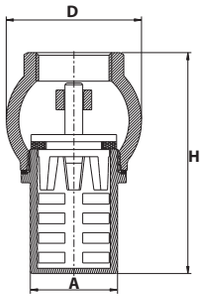



Material: Body and strainer in brass, plate in brass, sealing in NBR, strainer washer in fibre
Thread: UNI EN ISO 228/1
Norm: DM 174 06/04/2004
Working temperature: max +100°C

Codice - *Code*	Ø	Pressure kg/cm2	D mm	H mm	A mm	Conf. - *Pack*		€ Cad. - *€ each*
2321408	1/2"	16 bar	38,0	62,0	24,5	15	60	
2321409	3/4"	16 bar	44,0	68,0	28,0	12	48	
2321410	1"	16 bar	48,0	76,0	30,5	6	36	
2321411	1"1/4	16 bar	57,0	95,0	38,0	5	20	
2321412	1"1/2	16 bar	66,0	101,5	45,5	3	12	
2321413	2"	16 bar	77,0	116,0	57,5	2	8	
2321414	2"1/2	16 bar	86,0	139,5	58,5	1	8	
2321415	3"	16 bar	111,0	148,5	78,0	1	8	
2321417	4"	16 bar	143,0	186,0	94,0	1	5	

ART. 408

Valvola di fondo tubolare
Brass tubolar back valve



Material: Yellow brass
Norm: DM 174 06/04/2004

Codice - *Code*	Ø	Pressure kg/cm2	Conf. - *Pack*	€ Cad. - *€ each*
2321009	3/4"	10 bar	10	
2321010	1"	10 bar	10	
2321011	1"1/4	10 bar	5	
2321012	1"1/2	8 bar	5	
2321013	2"	8 bar	2	

ART. 410

Valvola di ritegno Roma
Roma check valve



Material: Yellow brass
Thread: UNI EN ISO 228/1
Norm: DM 174 06/04/2004
Working temperature: min -20°C max 100°C with water max 150°C with hydrocarbon fluids or compressed air

Codice - *Code*	Ø	Pressure kg/cm2	Conf. - *Pack*	€ Cad. - *€ each*
2321208	1/2"	25 bar	8	96
2321209	3/4"	25 bar	6	72
2321210	1"	25 bar	5	45
2321211	1"1/4	18 bar	3	27

ART. 420

- R E -

Filtro raccoglitore impurità a Y

Y brass filter

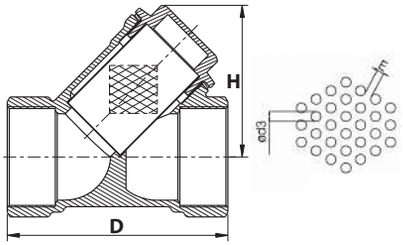



Material: Yellow brass, P.T.F.E. gasket, filter in stainless steel AISI 304 (3/8"-2" MCR 500, 2"1/2-3" MCR 1400)
Thread: UNI EN ISO 228/1
Norm: DM 174 06/04/2004
Working temperature: min -10°C max +100°C

Codice - *Code*	Ø	Pressure kg/cm2	Ød3 mm	E mm	D mm	H mm	Conf. - *Pack*		€ Cad. - *€ each*
2322407	3/8"	16 bar	0,5	1,7	46,0	31,0	24	144	
2322408	1/2"	16 bar	0,5	1,7	56,5	40,0	12	72	
2322409	3/4"	16 bar	0,5	1,7	66,0	46,0	10	40	
2322410	1"	16 bar	0,5	1,7	74,0	52,0	9	36	
2322411	1"1/4	16 bar	0,5	1,7	96,0	65,0	4	16	
2322412	1"1/2	16 bar	0,5	1,7	104,0	73,0	2	12	
2322413	2"	16 bar	0,5	1,7	125,0	91,0	1	8	
2322414	2"1/2	16 bar	1,4	3,8	146,0	107,0	1	4	
2322415	3"	16 bar	1,4	3,8	170,0	123,0	1	6	

ART. 422

- R E -

Valvola a clapet tenuta metallica

Metal seat clapet valve

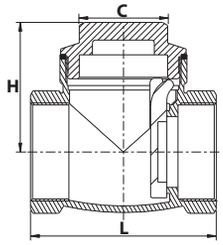



TENUTA METALLICA

Material: Yellow brass, metallic sealing
Thread: UNI EN ISO 228/1
Norm: DM 174 06/04/2004
Working temperature: 0°C / +90°C

Codice - *Code*	Ø	Pressure kg/cm2	C mm	L mm	H mm	Conf. - *Pack*		€ Cad. - *€ each*
2321808	1/2"	16 bar	22,0	48,0	32,8	12	72	
2321809	3/4"	16 bar	26,0	52,0	40,5	10	60	
2321810	1"	16 bar	26,5	63,0	44,5	6	24	
2321811	1"1/4	16 bar	34,0	74,0	51,5	5	20	
2321812	1"1/2	16 bar	37,0	80,0	53,5	4	16	
2321813	2"	16 bar	49,0	98,0	66,0	1	8	
2321814	2"1/2	16 bar	63,0	120,0	80,0	1	5	
2321815	3"	16 bar	77,0	135,0	92,0	1	7	

ART. 424

- R E -

Valvola a clapet tenuta gomma NBR

NBR seat clapet valve

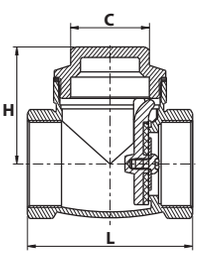



TENUTA GOMMA NBR

Material: Yellow brass, NBR sealing
Thread: UNI EN ISO 228/1
Norm: DM 174 06/04/2004
Working temperature: 0°C / +90°C

Codice - *Code*	Ø	Pressure kg/cm2	C mm	L mm	H mm	Conf. - *Pack*		€ Cad. - *€ each*
2321858	1/2"	16 bar	22,0	48,0	32,8	12	72	
2321859	3/4"	16 bar	26,0	52,0	40,5	10	60	
2321860	1"	16 bar	26,5	63,0	44,5	6	24	
2321861	1"1/4	16 bar	34,0	74,0	51,5	5	20	
2321862	1"1/2	16 bar	37,0	80,0	53,5	4	16	
2321863	2"	16 bar	49,0	98,0	66,0	1	8	
2321864	2"1/2	16 bar	63,0	120,0	80,0	1	5	
2321865	3"	16 bar	77,0	135,0	92,0	1	7	
2321867	4"	16 bar	106,0	160,0	103,0	1	4	

ART. 430

- R E -

Saracinesca pesante in ottone passaggio totale

Full port heavy brass gate valve

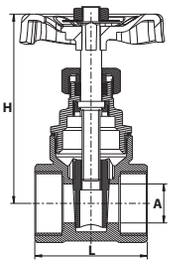



Material: Yellow brass
Thread: UNI EN ISO 228/1
Norm: DM 174 06/04/2004
Working temperature: 0°C / +80°C

Codice - *Code*	Ø	Pressure kg/cm2	A mm	L mm	H mm	Conf. - *Pack*		€ Cad. - *€ each*
1107008	1/2"	16 bar	13,0	37,5	65,5	12	48	
1107009	3/4"	16 bar	15,0	41,0	67,0	12	48	
1107010	1"	16 bar	19,0	44,5	76,5	8	32	
1107011	1"1/4	16 bar	26,0	50,5	90,5	4	24	
1107012	1"1/2	16 bar	33,0	51,0	96,0	3	12	
1107013	2"	16 bar	42,0	61,0	119,0	2	8	
1107014	2"1/2	16 bar	60,0	66,0	159,0	1	10	
1107015	3"	16 bar	68,0	84,0	185,0	1	8	
1107017	4"	16 bar	93,0	80,0	227,0	1	4	

ART. 434

Valvola antisabbia tipo FIAT

FIAT anti-sand valve



Material: Yellow brass
Thread: UNI EN 10226-1 (ex iso 7/1)
Norm: DM 174 06/04/2004

Codice - *Code*	Ø	Pressure kg/cm2	Conf. - *Pack*		€ Cad. - *€ each*
2321610	1"	10 bar	1	5	
2321611	1"1/4	10 bar	1	5	
2321612	1"1/2	10 bar	1	5	

ART. 435

Valvola a sfera con molla

Ball valve with spring



Material: Yellow brass
Thread: UNI EN ISO 228/1
Norm: DM 174 06/04/2004

Codice - *Code*	Ø	Conf. - *Pack*		€ Cad. - *€ each*
1102308	1/2"	1	5	
1102309	3/4"	1	5	
1102310	1"	1	5	

ART. 436

Valvola a squadro tenuta P.T.F.E.

P.T.F.E. squared valve



Material: Yellow brass
Thread: UNI EN ISO 228/1
Norm: DM 174 06/04/2004

Codice - *Code*	Ø	Conf. - *Pack*		€ Cad. - *€ each*
1107906	1/4''	1	5	
1107908	1/2''	1	5	

ART. 436A

- R E -

Rubinetto a sfera con portagomma

Hose bibcock valve



Material: Yellow brass
Thread: UNI EN ISO 228/1
Norm: DM 174 06/04/2004

Codice - *Code*	Ø	Conf. - *Pack*		€ Cad. - *€ each*
1120608	1/2"	12	120	
1120609	3/4"	10	100	
1120610	1"	8	64	

ART. 436B

- R E -

NEW

Rubinetto a sfera con portagomma serie pesante

Hose bibcock valve



Material: Yellow brass
Thread: UNI EN ISO 228/1
Norm: DM 174 06/04/2004

Codice - *Code*	Ø	Conf. - *Pack*		€ Cad. - *€ each*
NEW 1120618	1/2"	12	120	
NEW 1120619	3/4"	10	100	
NEW 1120620	1"	8	64	

ART. 436C

- R E -

Rubinetto a sfera con portagomma duplex

Duplex hose bibcock valve



Material: Yellow brass
Thread: UNI EN ISO 228/1
Norm: DM 174 06/04/2004

Codice - *Code*	Ø	Conf. - *Pack*		€ Cad. - *€ each*
1120758	1/2" x 3/4" x 3/4"	5	50	

ART. 436D

- R E -

Raccordo a girello

Metal hose connector



Material: Yellow brass
Thread: UNI EN ISO 228/1
Norm: DM 174 06/04/2004

Codice - *Code*	girello *small disk*	x rubinetto *tap*	Conf. - *Pack*		€ Cad. - *€ each*
0220609	3/4"	3/8" - 1/2"	12	120	
0220610	1"	3/4"	10	100	
0220611	1"1/4	1	8	64	



ART. 437

Rubinetto in bronzo a leva
Lever bronze tap

Codice *Code*	Ø	Conf. - *Pack*	€ Cad. *€ each*
5010006	1/2"	35	
5085782	solo vitone	1	



ART. 438

Rubinetto in bronzo c/volantino
Hand-wheel bronze tap

Codice *Code*	Ø	Conf. - *Pack*	€ Cad. *€ each*
5010004	1/2"	35	
5085781	solo vitone	1	



ART. 439

Rubinetto in ottone giallo a pulsante per fontana
Tap with push button

Codice *Code*	Ø	Conf. - *Pack*	€ Cad. *€ each*
1122228	1/2"	12	



ART. 440

Rubinetto in ottone giallo lucido con portagomma. Tipo pesante
Yellow polished brass tap with hose connector

Codice *Code*	Ø	Conf. - *Pack*	€ Cad. *€ each*
1120858	1/2"	100	
1120859	3/4"	20	



ART. 441

Rubinetto a sfera per chiusura a lucchetto
Lock ball cock

Codice *Code*	Ø	Conf. - *Pack*	€ Cad. *€ each*
1120508	1/2"	8/48	
1120509	3/4"	8/48	



ART. 442

Rubinetto a sfera per olio
Bibcocks for oil canister

Codice *Code*	Ø	Conf. - *Pack*	€ Cad. *€ each*
1151028	1/2"	40/160	



ART. 443

Rubinetto idrante a squadro
Square hydrant tap

Codice *Code*	Ø	Conf. - *Pack*	€ Cad. *€ each*
0307208	1/2"	50	
0307209	3/4"	10	



ART. 445

Rubinetto a sfera con portagomma tipo pesante
Heavy ball cock with hose-connector

Codice *Code*	Ø	Conf. - *Pack*	€ Cad. *€ each*
1120712	1/2"	20/80	
1120713	3/4"	12/48	



EKO

ART. 446

Rubinetto a sfera Eko con portagomma tipo pesante
Heavy Eko ball cock with hose-connector

Codice *Code*	Ø	Conf. - *Pack*	€ Cad. *€ each*
1120658	1/2"	12/48	
1120659	3/4"	6/60	
1120660	1"	4/16	



EKOMATIC

Con attacco rapido EKOMATIC.

Codice *Code*	Ø	Conf. - *Pack*	€ Cad. *€ each*
1120698	1/2"	12/48	



ANTIGELO

ART. 447

Rubinetto a sfera antigelo SPIN con portagomma in nylon flessibile; temperatura -20°C/+ 80°C
SPin top against freeze with mobile hose connector

Codice *Code*	Ø	Conf. - *Pack*	€ Cad. *€ each*
1120708	1/2" x 3/4"	10/50	



ANTIGELO

ART. 448

Rubinetto a sfera con portagomma con elevata resistenza al gelo
Against freeze with mobile hose connector

Codice *Code*	Ø	Conf. - *Pack*	€ Cad. *€ each*
1120709	1/2"	20/80	
1120710	3/4"	12/48	