PRODOTTO | *PRODUCT*

VALVOLA A SFERA F.F. CON LEVA

F.F. BALL VALVE, WITH HANDLE, BODY NICKELED BRASS

CODICE ARTICOLO | *CODE*
300

FAMIGLIA | *FAMILY*

VALVOLE A SFERA
BRASS BALL VALVES

MATERIALE | *MATERIAL*

LEVER HANDLE IN STEEL, BODY IN NICKEL PLATED BRASS CW617N, P.T.F.E. GASKET

FILETTATURA | *THREAD*

UNI ISO 228-1

01 DISEGNO TECNICO | *TECHNICAL DRAWING*

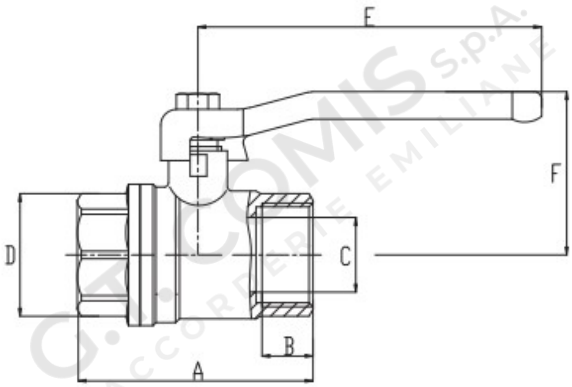

02 IMMAGINE PRODOTTO | *PRODUCT PICTURE*

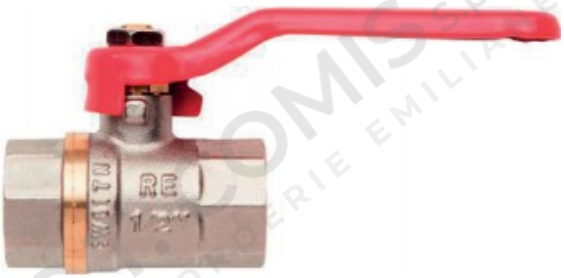

03 DATI TECNICI | *TECHNICAL DATA*

CODICE	Ø	A mm	B mm	C mm	D mm	E mm	F mm	Pressure kg/cm 2	CONF.	PACK
1100027	3/8”	46,0	10,0	9,9	21,6	86,5	40,0	30 bar	15	135
1100028	1/2”	53,0	12,5	14,0	24,5	84,0	41,0	30 bar	10	90
1100029	3/4”	60,0	13,0	19,0	29,5	84,0	44,5	30 bar	15	60
1100030	1”	65,5	13,0	22,5	36,0	104,5	57,0	30 bar	10	40
1100031	1”1/4	76,5	14,5	30,0	46,0	120,0	63,0	20 bar	5	20
1100032	1”1/2	84,5	15,5	35,0	52,5	162,0	72,5	20 bar	4	16
1100033	2”	100,0	16,5	45,5	65,0	168,0	86,0	20 bar	2	8
1100034	2”1/2	124,5	20,0	59,0	82,5	220,0	105,0	16 bar	1	6
1100035	3”	154,0	22,0	73,0	100,0	255,0	130,0	16 bar	1	4
1100037	4”	177,0	24,0	95,0	126,0	255,0	144,0	16 bar	1	2

04 NOTE TECNICHE | *NOTES*

NORM: DM 174 06/04/2004, REGOLAMENTO (CE) N. 1907/2006 (REACH)
WORKING TEMPERATURE MIN/MAX: -20°C + 150°C

PRODOTTO | *PRODUCT*

VALVOLA A SFERA F.F. CON LEVA

F.F. BALL VALVE, WITH HANDLE, BODY NICKELED BRASS

CODICE ARTICOLO | *CODE*
300

FAMIGLIA | *FAMILY*

VALVOLE A SFERA
BRASS BALL VALVES

MATERIALE | *MATERIAL*

LEVER HANDLE IN STEEL, BODY IN NICKEL PLATED BRASS CW617N, P.T.F.E. GASKET

FILETTATURA | *THREAD*

UNI ISO 228-1

01 DISEGNO TECNICO | *TECHNICAL DRAWING*

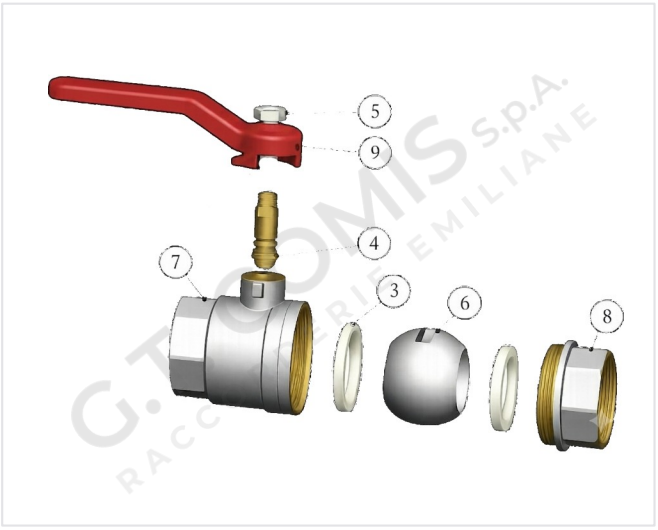

02 IMMAGINE PRODOTTO | *PRODUCT PICTURE*



03 DATI TECNICI | *TECHNICAL DATA*

	N° POS	DESCRIZIONE DESCRIPTION	Q.tà Q.ty	MATERIALE MATERIAL	
TENUTA	3	SEAT	2	P.T.F.E.	P.T.F.E.
ASTA DI MANOVRA	4	STEM	1	CW617N	OTTONE
DADO	5	NUT	1	ACCIAIO NICHEL.	ACCIAIO NICHEL.
SFERA	6	BALL	1	CW617N	OTTONE
CORPO	7	BODY	1	CW617N	OTTONE
MANIGLIA	8	BONNET	1	CW617N	OTTONE
MANIGLIA	9	HANDLE	1	FE	ACCIAIO