PRODOTTO | *PRODUCT*

VALVOLA A CLAPET TENUTA GOMMA NBR

NBR SEAT CLAPET VALVE

CODICE ARTICOLO | *CODE*
424

FAMIGLIA | *FAMILY*
FILTRI A Y E VALVOLE A CLAPET
Y FILTERS AND CLAPET VALVES

MATERIALE | *MATERIAL*
YELLOW BRASS, NBR SEALING

FILETTATURA | *THREAD*
UNI EN ISO 228/1

01 DISEGNO TECNICO | *TECHNICAL DRAWING*

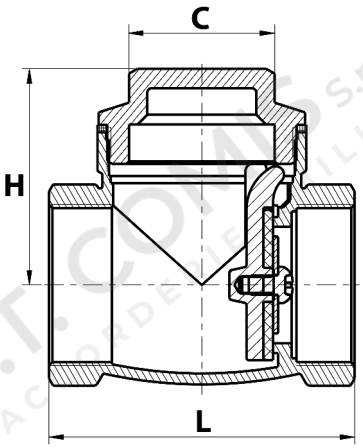

02 IMMAGINE PRODOTTO | *PRODUCT PICTURE*



03 DATI TECNICI | *TECHNICAL DATA*

CODICE	Ø	PRESSURE KG/CM2	C MM	L MM	H MM	CONF.	PACK
2321858	1/2”	16 BAR	22,0	48,0	32,8	12	72
2321859	3/4”	16 BAR	26,0	52,0	40,5	10	60
2321860	1”	16 BAR	26,5	63,0	44,5	6	24
2321861	1”1/4	16 BAR	34,0	74,0	51,5	5	20
2321862	1”1/2	16 BAR	37,0	80,0	53,5	4	16
2321863	2”	16 BAR	49,0	98,0	66,0	1	8
2321864	2”1/2	16 BAR	63,0	120,0	80,0	1	5
2321865	3”	16 BAR	77,0	135,0	92,0	1	7

04 NOTE TECNICHE | *NOTES*

NORM: DM 174 06/04/2004 REGOLAMENTO (CE) N.1907/2006 (REACH)
WORKING TEMPERATURE: 0°C / +90°C